LINDEMANN-REGNER

Your Leading EPC Partner And Manufacturer Of Energy Systems In Europe

LND ENERGY GMBH PROFILE

A Tier 1 Global Transformer and SST Manufacturer

CONTACT US

Contact Phone: +49 8131 6149236

Email: info@lindemann-regner.de

Address: Liebig Str. 5, 85757 Karlsfeld, Germany

Official Website: www.LND-Energy.de

COMPANY PROFILE

LND ENERGY GMBH (Headquartered in Munich, Germany)

– is a global manufacturer of transformers and solid-state transformers (SST),
The company represents top-level quality in the European power engineering industry.

With profound technical expertise and rigorous quality standards, LND Energy has set a benchmark for precision and reliability in electrical manufacturing. The company operates a joint production center in Jiangsu Province, China, establishing a globally integrated model of "German headquarters + Chinese production. " This approach combines German engineering excellence with flexible, globally oriented manufacturing and service capabilities.

CORE BUSINESS

Power Infrastructure Solutions
company specializes

European / Middle Eastern
Key Markets

EPC Services

The EPC business provides full-cycle services from load calculation, system design, equipment selection, and standardized installation to commissioning, operation, and acceptance. These services cover a wide range of applications including renewable energy integration, grid modernization, industrial high-reliability power distribution, and commercial power supply systems. This approach helps shorten project timelines and reduce coordination costs. For the European market, CE and EN standards are strictly followed, while for the Middle East market, special emphasis is placed on high-temperature endurance and sand-resistance design. Multiple benchmark projects have been successfully delivered.

Power Equipment Manufacturing

The product range includes transformers, power distribution systems, and other key electrical components. All products are developed and manufactured according to international standards, ensuring high efficiency, reliability, and operational safety.

PHILOSOPHYCORPORATE

Based on the principle of "German standards and global collaboration," LND Energy provides integrated power solutions covering product development, manufacturing, engineering, and project execution.

The company aims to contribute to global energy transformation and grid modernization, becoming a reliable partner in international power infrastructure development.

CORE PRODUCTS

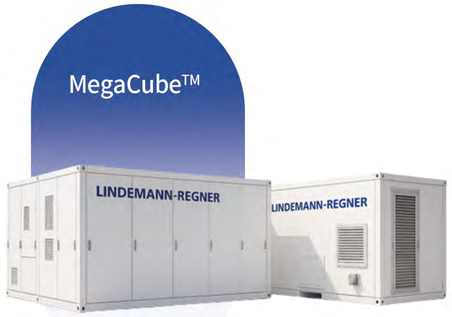

Transformers: Oil-immersed and dry-type transformers compliant with DIN 42500 and IEC 60076 standards, featuring high reliability, low losses, and long service life. Rated capacities range from 100 kVA to 200 MVA with voltage levels from 400 V to 430 kV.

MegaCube™: An integrated, independent pre-installed energy storage system combining E-House (prefabricated cabin) and containerized battery cabinets, with core component integration, wiring and commissioning completed in-factory. Compliant with mainstream EU/US wiring standards and communication protocols for compatibility and reliability. On-site, no complex wiring/commissioning-basic installation enables "plug-and-play", ensuring efficient deployment and a revolutionary solution for energy storage project

Distribution Systems: E-houses, ring main units, and high and low-voltage switchgear compliant with EN 62271, characterized by intelligent control, modular design, and high operational safety.

Other Products: AIDC power supply systems, control and monitoring units, and solid-state transformers designed to cover multiple stages of the power system chain.

LINDEMANN-REGNER www.LND-Energy.de

INTELLIGENT MANUFACTURING WORKSHOP

MES "INTELLIGENT BRAIN"

Enhance efficiency and monitor production in real time

The equipment has been integrated with SAP, PLM and MES systems to ensure the balance of production processes and material flow, further improving efficiency, quality and fulfillment capabilities. To break through the efficiency bottlenecks in the entire chain from "design - production - management and control", the company achieves multi-level optimization through multi-system interaction. Design data is directly connected to production, eliminating the need for paper-based transmission of BOM and process routes. PLM and 3D software enable automatic processing by equipment, achieving seamless integration between design and manufacturing. In terms of production planning, MES decomposes the main plan from ERP into three-level online plans, and APS automatically generates work orders and intelligently selects materials, enhancing efficiency and reducing inventory. On-site management is facilitated by the informatization of production lines and WMS systems, accelerating operations and material transfer, and ensuring full control over production scheduling, logistics and execution, significantly improving operational efficiency.

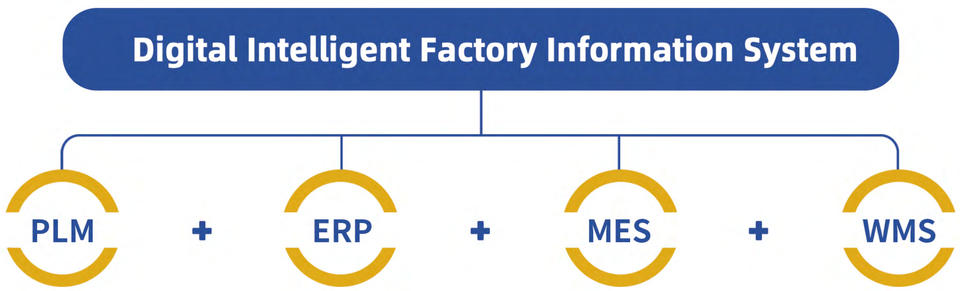

CORE PROCESSES

CORE TECHNOLOGY FOR TRANSFORMERS

Silicon steel transverse cutting / fully automated transverse cutting line

Silicon steel longitudinal cutting / fully automated longitudinal cutting line

Core stacking / fully automatic robotic stacking system

Winding casting / intelligent vacuum casting system

CORE PROCESSES FOR RING MAIN UNITS (RMU)

Cabinet assembly / fully automated assembly and production line

Cabinet welding / TRUMPF laser welding system, Germany

Cabinet cutting / TRUMPF laser cutting system, Germany

Gas leakage inspection / SEILER automatic helium leak detection system, Germany

STANDARDS COMPLIANCE & CERTIFICATION

Supported by an intelligent, process-controlled manufacturing system and comprehensive final testing at the intelligent inspection center, all products are guaranteed to comply with **German standard DIN 42500** and **international quality standard IEC 60076**.

E-HOUSE
Energy Storage

Voltage: 0.69-10.5/21/35 kV

Power: 1000-5000 kVA

LS2750/3150/3450UD-MV

Product Features

Efficient Conversion
- Three-level topology, maximum efficiency up to 99%
- Intelligent air cooling, no derating at 45 °C ambient temperature
- Wide DC operating voltage range, full-load operation up to 1500 V

Safe And Reliable
- High protection level (IP65, optional C5 corrosion protection)
- DC side short-circuit current breaking capacity up to 250 kA
- Coordinated operation with BMS and EMS, supporting multiple system protections

Flexible Application
- Four-quadrant operation with battery charge/discharge management
- Supports VSG, VF, and PQ operation modes
- Hundreds of MW off-grid parallel operation, capable of independent grid black start

Grid Support
- Supports primary frequency regulation and fast dispatch between source, grid, and load
- Stable operation with SCR = 1.018, excellent grid adaptability
- Complies with IEC 61850 protocol and supports fast power response (< 20 ms)

Circuit Block Diagram

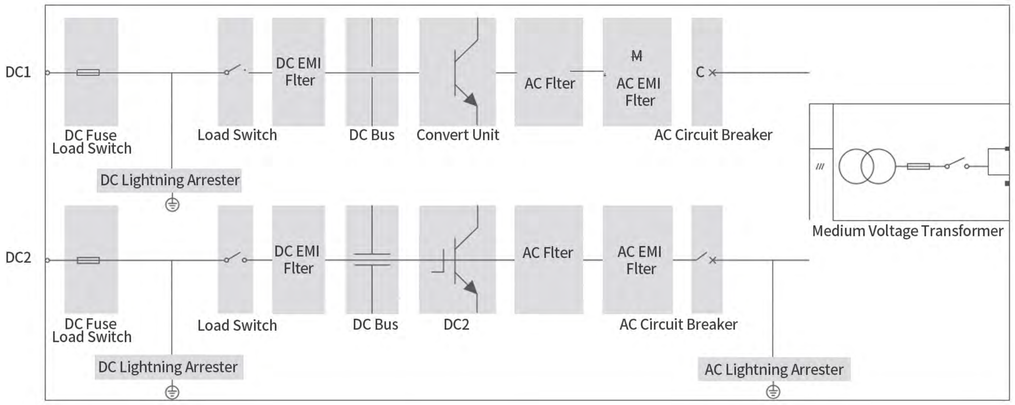

Technical Parameters

PRODUCT MODEL	LS2750UD-MV	LS3150UD-MV	LS3450UD-MV
DC SIDE			
Maximum DC voltage		1500V	
Minimum DC voltage	800V	915V	1000V
Rated power DC voltage operating range	800~1500V	915~1500V	1000~1500V
Maximum DC operating current		1935A×2	
Number of DC input channels		2	
AC SIDE (GRID-CONNECTED)			
Rated output @ 45 °C	2750kVA	3150kVA	3450kVA
Maximum output @ 30 °C	3025kVA	3465kVA	3795kVA
Maximum AC current at converter port		1587A×2	
Rated AC Voltage at Converter Port	550V	630V	690V
AC Voltage Range at Converter Port	467.5~605V	535.5~693V	586.5~759V
Rated Grid Frequency / Grid Frequency Range		50Hz / 45~55Hz	
AC Current Harmonics		< 3% (at rated power)	
Power factor		> 0.99 at rated power	
Reactive Power Adjustable Range		-105%~105%	
Number of feed phases/number of output phases		3 / 3	
AC SIDE (OFF-GRID)			
Rated AC Voltage at Converter Port	550V	630V	690V
AC Voltage Range at Converter Port	467.5~605V	535.5~693V	586.5~759V
AC voltage harmonics		< 3% (linear load)	
DC voltage component		< 0.5% Un (linear balanced load)	
Unbalanced load capacity		100%	
Rated grid frequency/grid frequency range		50Hz / 45~55Hz	
EFFICIENCY			
Maximum Converter Efficiency		99%	
TRANSFORMER			
Rated transformer power	2750kVA	3150kVA	3450kVA
Maximum transformer power	3025kVA	3465kVA	3795kVA
LV/MV voltage	0.55kV / 37kV	0.63kV / 37kV	0.69kV / 37kV
Transformer connection group		Dy1 or Dy11	
PROTECTION			
DC input protection	Load switch + fuse		
Converter output protection	Circuit Breaker		
AC output protection	Load switch + fuse		
Surge protection	DC Type II / AC Type II		
Grid monitoring/ground fault monitoring	Yes/Yes		
Insulation monitoring	Have		
Overtemperature protection	Have		
GENERAL PARAMETERS			
Dimensions (W × H × D)	6140×2515×2515mm		
Weight	14T		
Protection degree	IP54 (converter IP65)		
Operating temperature range	-35 ~ 60 °C (> 45 °C derating operation)		
Relative humidity range	0~100%		
Converter cooling method	Intelligent forced air cooling		
Maximum Operating Altitude	4000m (> 2000m derating)		
Display	LED，WLAN+WEB HMI		
Communication	RS485，CAN，Ethernet		
Standards compliance	GB/T 34120，GB/T 34133		
Grid support	L/HVRT, L/HFRT, active and reactive power control, power slope control		

*Specifications and dimensions are subject to change without prior notice. The latest documentation shall prevail.

LS5000UD-MV-P3

E-HOUSE
Power Distribution Network

Voltage: 0.4/0.69-10.5/21/35 kV

Power: 100-50000 kVA

Product Features

Efficient Conversion
- Three-level topology, maximum efficiency up to 99%
- Intelligent air cooling, maximum operating temperature 60°C

Safe And Reliable
- High protection level IP55/C5
- Online insulation monitoring ensures safety
- Coordinated operation with BMS and EMS, supporting multiple system protections

Flexible Application
- Hundred-megawatt-class off-grid parallel operation, capable of independent grid black start, supporting VSG, VF, and PQ operation modes
- Supports operation in various environments such as high altitude, high salinity, high temperature, and extreme low temperature

Grid Support
- Fast active/reactive power response, supporting coordinated control of generation, grid, load, and storage
- Strong weak-grid adaptability, stable operation with SCR = 1.015
- Provides inertia support and microsecond-level voltage formation capability for grid-forming applications

Circuit Block Diagram

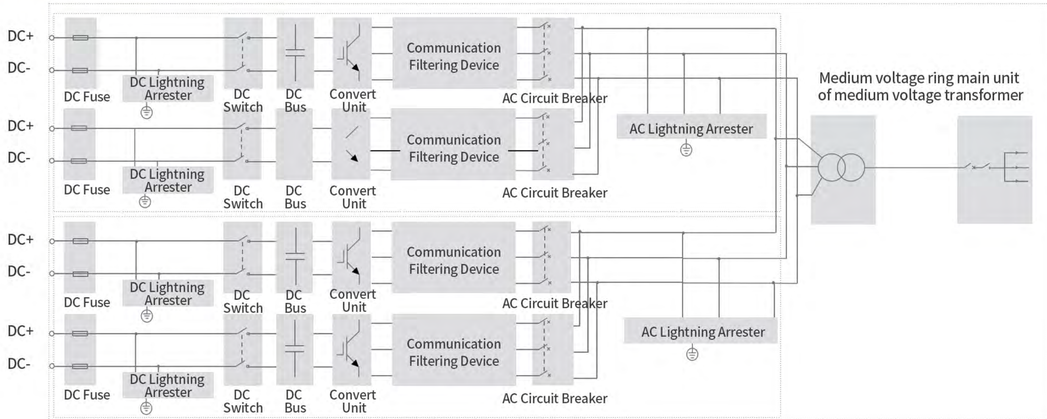

Technical Parameters

PRODUCT MODEL	LS5000UD-MV-P3
GENERAL PARAMETERS	
Dimensions (W * H * D)	7500 mm * 2915 mm * 3200 mm
Weight	20000 kg
Protection Degree	IP55
Operating temperature range	-35 ℃ ~ 60 ℃
Relative humidity range	0 % ~ 100 %
Maximum operating altitude	5000 m
Communication interface	RS485, Ethernet, CAN
Communication protocol	Modbus TCP, IEC 104, IEC 61850
Standards Compliance	GB/T 34120, GB/T 34133
DC SIDE	
DC Voltage Operating Range	1000 V ~ 1500 V
Maximum current	2806 A * 2 / 1403 A * 4
Number of DC Inputs	2 / 4
AC SIDE (GRID-CONNECTED)	
Rated power	5000 kW
Maximum power	5500 kW
Maximum AC current at converter port	2302 A * 2
Rated AC Voltage at Converter Port	690 V
AC Voltage Range at Converter Port	586.5 V ~ 759 V
Rated Grid Frequency	50 Hz
Grid Frequency Range	45 Hz ~ 55 Hz
Current harmonics	< 3% (rated power)
Power Factor (Adjustable Range)	> 0.99 (rated power)/-1 ~ 1
Reactive Power Adjustable Range	-105 % ~ 105 %
AC SIDE (OFF-GRID)	
Rated AC Voltage at Converter Port	690 V
AC Voltage Range at Converter Port	586.5 V ~ 759 V
AC voltage harmonics	< 3% (linear load)
DC voltage component	< 0.5% Un (linear balanced load)
Unbalanced load capacity	100% (linear load)
Rated grid frequency	50 Hz
Grid frequency range	45 Hz ~ 55 Hz
CONVERTER EFFICIENCY	
Maximum converter efficiency	99 %
TRANSFORMER PARAMETERS	
Rated power	5000 kVA
Voltage transformation ratio	37 kV / 0.69 kV
Connection Group	Dy11

*Specifications and dimensions are subject to change without prior notice. The latest documentation shall prevail.

SST SOLID-STATE TRANSFORMER R&D

Next-generation semiconductor-based power conversion

To reinforce our European premium quality DNA, the company has established an R&D center for European electrical and SST standards in China. The core technical team is led by senior engineers from China, Germany, and the Czech Republic, integrating the latest technological developments from both Europe and China. Our manufacturing base is certified to DIN EN ISO 9001, ensuring the synergy of German design and efficient Chinese production.

Ultra-High Efficiency

⩾98.5% efficiency reduces energy losses and operational costs

Compact Size

60% smaller footprint compared to traditional transformers

Bidirectional Power

Seamless power flow control for grid stabilization and storage integration

Fast Protection

Millisecond-level protection with <10 ms fault isolation

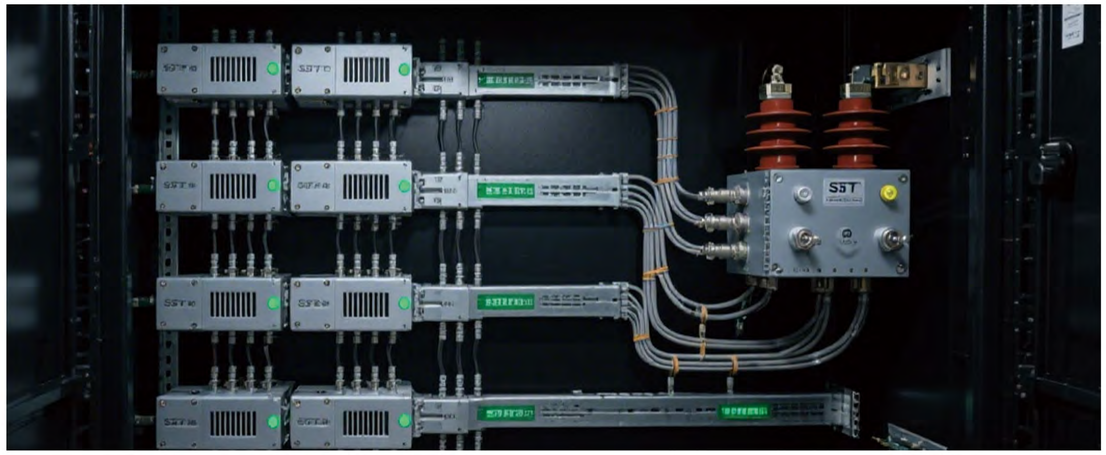

Currently, the company is conducting in-depth collaboration with globally renowned universities such as TU Dresden (Germany) and Shanghai Jiao Tong University (China), jointly developing SST solid-state transformers and key components. Medium-voltage MW-class products are expected to be launched in 2027, undergoing the most rigorous TÜV performance testing in Germany. With European top-tier quality as its foundation, the technology aims to drive the global power equipment upgrade and contribute to the energy transition through the strength of German engineering and Chinese industrial excellence.

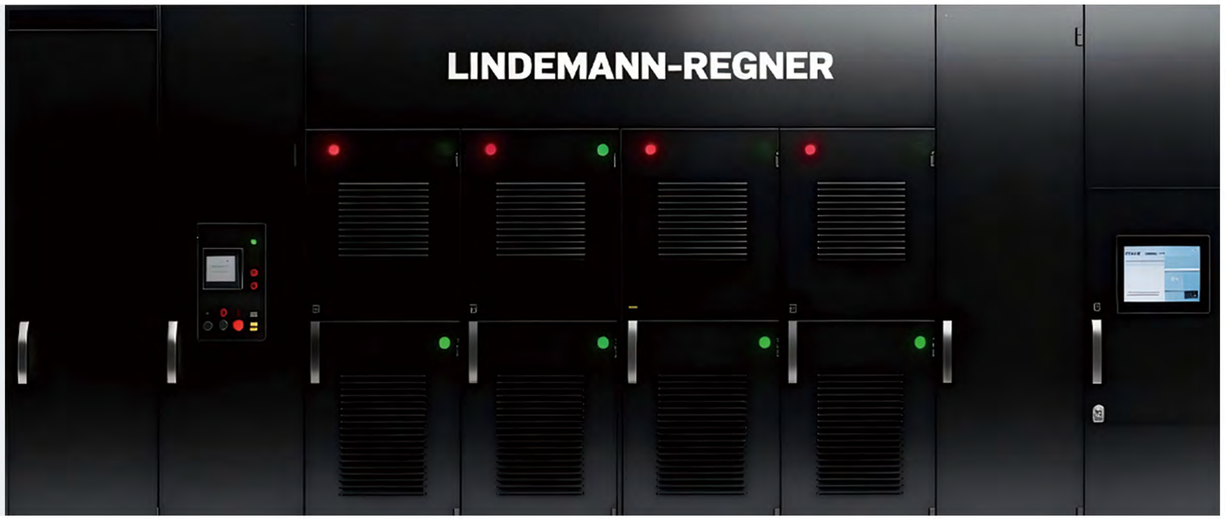

EPC

FULL LIFECYCLE PROJECT MANAGEMENT

The company operates as a German EPC provider (Engineering, Procurement, Construction) within the European and Middle Eastern energy sectors. Its activities focus on comprehensive lifecycle management of complex energy projects, covering all stages from conceptual design to long-term operation. The service portfolio spans the entire value chain of energy infrastructure projects, including offshore wind grid connections, energy storage systems, and large-scale distribution facilities. All projects are executed in accordance with German engineering and safety standards, ensuring efficiency, operational reliability, and sustainability through an integrated management approach.

Technical Consulting and Project Evaluation

Energy audits, feasibility studies, and market assessments form the basis for customized solutions in compliance with DIN,EN,and IEC standards.

Lifecycle-Oriented Planning and Design Optimization

Design and planning are based on total lifecycle cost analysis, combining accurate budgeting with performance-oriented engineering.

Procurement and System Integration

Strict supply chain control and the use of European resources guarantee adherence to the highest quality and energy efficiency requirements.

Digital and Modular Construction

Modular design principles and digital monitoring systems shorten construction time and reduce on-site risks.

Quality Assurance and Maintenance

After the project is put into operation, intelligent monitoring, preventive maintenance and rapid response services will be provided.

Project Refinancing & Operational Performance Support

For operational projects, the company provides financial and technical support, enabling clients to improve profitability, cash flow, and long-term asset performance.

SERVICE

From conceptual planning to long-term operation, LND Energy provides comprehensive lifecycle support based on certified engineering, digital supervision, and on-site service expertise. The company's competence covers EPC implementation, transformer and switchgear manufacturing, as well as smart grid and system integration for utility and industrial power networks.

EPC Project & Installation

Turnkey implementation and safe commissioning of medium- and high-voltage transformers, SST systems, and switchgear in full compliance with IEC and EN standards. All projects follow structured execution procedures ensuring electrical, mechanical, and operational reliability throughout commissioning and service life.

Comprehensive Technical Maintenance

Preventive and corrective maintenance programs defined under Service Level Agreements (SLAs) secure maximum equipment uptime, operational safety, and extended lifecycle performance. Condition monitoring and predictive diagnostics enable proactive maintenance strategies and optimized cost efficiency.

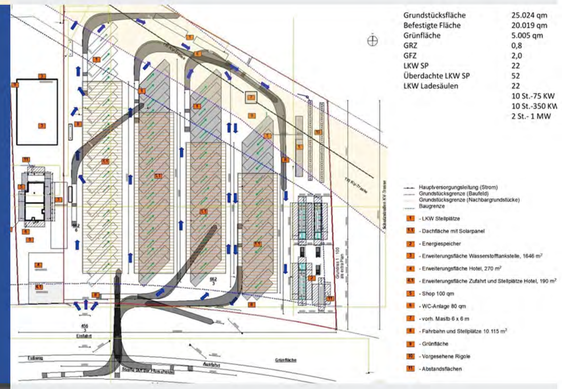

HV/MV Transformer & System Design

Engineering design and simulation for distribution networks, grid interconnections, and microgrids, including load-flow studies, short-circuit analysis, and ROI modeling. System architectures are developed in accordance with European grid codes and regional operating conditions.

GLOBAL DELIVERY & SERVICE NETWORK

Leveraging a coordinated network of German R&D, Chinese intelligent manufacturing, and global logistics, LND Energy has established a rapid delivery and service network ensuring 72-hour service response and 30–90 day core equipment delivery.

After-Sales Service

A service network headquartered in Munich and covering France, the Czech Republic, Hungary, Poland, and Dubai, with more than 20 authorized service partners across Europe, enables 72-hour response times and 24/7 remote technical assistance.

Production Assurance

Regional production and logistics centers in Lübeck, Shanghai, and Dubai maintain strategic inventories of transformers, RMUs, and switchgear systems, guaranteeing continuous supply capability for major grid and EPC projects.

Warehousing Network

Dedicated long-term storage facilities at Lübeck, Shanghai, and Dubai ensure the immediate availability of key components for core regional markets.

Logistics Coordination

Through cooperation with DHL and international logistics providers, a multimodal transport concept—comprising sea, air, and land routes-enables 48-hour dispatch within Europe and 30- to 90-day global delivery. For critical infrastructure projects, the "Global Priority Dispatc" program ensures time-bound delivery and coordinated commissioning support.

LND ENERGY PROJECTS

01 180 kW Ultra-Fast Charging + Customized BESS + LND Energy High-Efficiency Power Conversion

Advanced German grid-boosting technology ensuring efficient and stable charging performance.

02

LND Energy Integrated Off-Grid / Microgrid Solution

Hybrid power supply with solar PV, diesel generation, BESS, and EMS.

03 LND Energy Grid-Connected / Microgrid System

1000 W peak load management + 180 kW ultra-fast charging. Self-developed MP-ESS-200 modular cabinet integrated with 137 kWp PV array.

04

100 kW Stable Microgrid for Irrigation Supply

Reliable operation under extreme temperatures up to 55 °C, integrating PV, diesel generation, BESS, EMS, and active liquid cooling.

05

5 MVA High-Capacity Microgrid with Charging Infrastructure

Grid-connected hybrid solution combining PV generation and dynamic AC/DC load management.