LINDEMANN-REGNER

Your Leading EPC Partner And Manufacturer Of Energy Systems In Europe

LINDEMANN-REGNER PROFILE

A Tier 1 Global Transformer and SST Manufacturer

CONTACT US

Contact Phone: +49 8131 6149236

Email: info@lindemann-regner.de

Address: Liebig Str. 5, 85757 Karlsfeld, Germany

Official Website: www. lindemann-regner, de

COMPANY PROFILE

LINDEMANN - REGNER (Headquartered in Munich, Germany)

- is a global manufacturer of transformers and solid-state transformers (SST),
The company represents top-level quality in the European power engineering industry.

With profound technical expertise and rigorous quality standards, Lindemann-Regner has set a benchmark for precision and reliability in electrical manufacturing. The company operates a joint production center in Jiangsu Province, China, establishing a globally integrated model of "German headquarters + Chinese production. " This approach combines German engineering excellence with flexible, globally oriented manufacturing and service

CORE BUSINESS

Power Infrastructure Solutions
company specializes

European / Middle Eastern
Key Markets

EPC Services

The EPC business provides full-cycle services from load calculation, system design, equipment selection, and standardized installation to commissioning, operation, and acceptance. These services cover a wide range of applications including renewable energy integration, grid modernization, industrial high-reliability power distribution, and commercial power supply systems. This approach helps shorten project timelines and reduce coordination costs. For the European market, CE and EN standards are strictly followed, while for the Middle East market, special emphasis is placed on high-temperature endurance and sand-resistance design. Multiple benchmark projects have been successfully delivered.

Power Equipment Manufacturing

The product range includes transformers, power distribution systems, and other key electrical components. All products are developed and manufactured according to international standards, ensuring high efficiency, reliability, and operational safety.

PHILOSOPHYCORPORATE

Based on the principle of "German standards and global collaboration," Lindemann-Regner provides integrated power solutions covering product development, manufacturing, engineering, and project execution.

The company aims to contribute to global energy transformation and grid modernization, becoming a reliable partner in international power infrastructure development.

CORE PRODUCTS

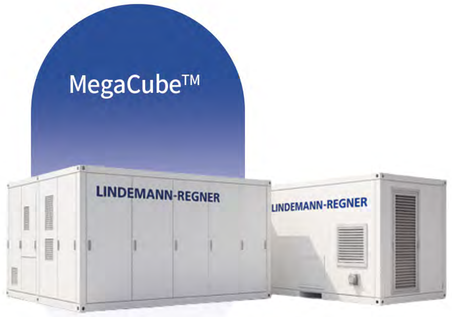

Transformers: Oil-immersed and dry-type transformers compliant with DIN 42500 and IEC 60076 standards, featuring high reliability, low losses, and long service life. Rated capacities range from 100 kVA to 200 MVA with voltage levels from 400 V to 430 kV.

MegaCube™: An integrated, independent pre-installed energy storage system combining E-House (prefabricated cabin) and containerized battery cabinets, with core component integration, wiring and commissioning completed in-factory. Compliant with mainstream EU/US wiring standards and communication protocols for compatibility and reliability. On-site, no complex wiring/commissioning-basic installation enables "plug-and-play", ensuring efficient deployment and a revolutionary solution for energy storage project

Distribution Systems: E-houses, ring main units, and high and low-voltage switchgear compliant with EN 62271, characterized by intelligent control, modular design, and high operational safety.

Other Products: AIDC power supply systems, control and monitoring units, and solid-state transformers designed to cover multiple stages of the power system chain.

LINDEMANN-REGNER www.lindemann-regner.de

INTELLIGENT MANUFACTURING WORKSHOP

MES "INTELLIGENT BRAIN"

Enhance efficiency and monitor production in real time

The equipment has been integrated with SAP, PLM and MES systems to ensure the balance of production processes and material flow, further improving efficiency, quality and fulfillment capabilities. To break through the efficiency bottlenecks in the entire chain from "design - production - management and control", the company achieves multi-level optimization through multi-system interaction. Design data is directly connected to production, eliminating the need for paper-based transmission of BOM and process routes. PLM and 3D software enable automatic processing by equipment, achieving seamless integration between design and manufacturing. In terms of production planning, MES decomposes the main plan from ERP into three-level online plans, and APS automatically generates work orders and intelligently selects materials, enhancing efficiency and reducing inventory. On-site management is facilitated by the informatization of production lines and WMS systems, accelerating operations and material transfer, and ensuring full control over production scheduling, logistics and execution, significantly improving operational efficiency.

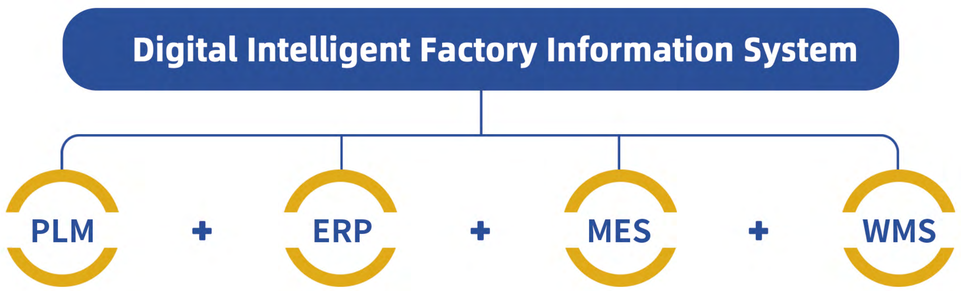

CORE PROCESSES

CORE TECHNOLOGY FOR TRANSFORMERS

Silicon steel transverse cutting / fully automated transverse cutting line

Silicon steel longitudinal cutting / fully automated longitudinal cutting line

Core stacking / fully automatic robotic stacking system

Winding casting / intelligent vacuum casting system

CORE PROCESSES FOR RING MAIN UNITS (RMU)

Cabinet assembly / fully automated assembly and production line

Cabinet welding / TRUMPF laser welding system, Germany

Cabinet cutting / TRUMPF laser cutting system, Germany

Gas leakage inspection / SEILER automatic helium leak detection system, Germany

STANDARDS COMPLIANCE & CERTIFICATION

Supported by an intelligent, process-controlled manufacturing system and comprehensive final testing at the intelligent inspection center, all products are guaranteed to comply with **German standard DIN 42500** and **international quality standard IEC 60076**.

OIL-IMMERSED TRANSFORMER
Energy Storage

Voltage: 0.69-10.5/21/35 kV

Power: 1000-5000 kVA

LT-ESS Series

Overview

The LT-ESS series oil-immersed combined transformers are developed to meet the growing demand for reliable power supply in modern photovoltaic and energy-storage applications.

Based on proven transformer technology and designed in accordance with the latest IEC standards, the series combines the transformer, load switch, and high-voltage fuse within a single compact tank.

Transformer oil is used throughout as both the insulating and cooling medium, ensuring high operational safety and long service life.

The LT-ESS transformers are suitable for 50/60 Hz systems up to 40 kV, with rated capacities from 1,000 to 4,000 kVA, making them ideal for power distribution in photovoltaic power plants and renewable energy systems.

Service Conditions

- **Altitude:** < 3000 m
- **Ambient Temperature Range:** 40 °C to +50 °C
- **Relative Humidity:** daily average ⩽ 95 %, monthly average ⩽ 90 %
- **Seismic Level:** horizontal acceleration 0.4 m/s²
- **Installation Environment:** ambient air shall be free from significant contamination by corrosive or flammable gases; installation site shall be free from severe vibration.

Technical Parameters

LT-ESS-0.69|35kV-1|5MVA-ONAN

*The following table lists typical models. Other ratings and configurations can be customized upon request.

Rated Power (kVA)	Voltage combination and tapping range			Vector Group	Short circuit impedance (%)	No-load loss (W)	Load loss (W)	No-load current (%)	Weight (kg)		Overall dimension (mm)
	High Voltage (kV)	High voltage tapping Range (%)	Low Voltage (kV)						oil weight	Total weight	L × W × H
1000	10.5 21 35	±2X2.5	0.69	Dy11/Yd11	6.5/7.0	600	10400	0.52	1820	7960	2020×1680×2020
1250						800	12500	0.48	1910	8250	2250×1760×2080
1600						900	14900	0.48	2000	8700	2250×1820×2180
2000						1200	16500	0.48	2170	9650	2380×1960×2270
2500						1400	17600	0.44	2320	10200	2540×2050×2380
3000						1600	20300	0.35	2520	116101	2630×2160×2420
3150						1700	20700	0.35	2610	219012	2650×2250×2460
3300						1750	21390	0.35	2610	27013	2650×2250×2470
3600						1860	22760	0.3	2800	36014	2730×2370×2500
4000						2000	24600	0.3	3020	860	2850×2500×2560

OIL-IMMERSED TRANSFORMER
Power Distribution Network

LT-DIST Series

Voltage: 0.4/0.69-10.5/21/35 kV

Power: 100-50000 kVA

Overview

Energy efficiency and loss reduction are among the key priorities in the power sector, with line loss rate being one of the major performance indicators for utilities. The LT-DIST series oil-immersed transformers are designed with a core of high-quality, cold-rolled, grain-oriented silicon steel. Using fully automated Swiss stacking equipment and multi-step oblique joint technology, the core assembly is pressed and secured with PET banding. This design effectively reduces no-load loss by up to 60 % and minimizes no-load current, achieving excellent energy performance. The structural design and process quality comply with the highest international standards.

Structural Features

The LT-DIST transformer core is typically made of amorphous alloy strip wound into a three-phase five-leg configuration with a rectangular cross-section.In three-phase applications, the core consists of four single-frame wound units that can be opened to facilitate coil installation.Core clamping and coil fastening adopt a sheet-metal frame structure, which ensures mechanical strength, compactness, smooth oil channels, efficient heat dissipation, and low stray losses.This structural concept provides an optimal balance between performance, reliability, and weight.

Applicable Standards	IEC 60076-12:2008; IEC 60076-3:2013; IEC 60076-5:2006
Rated Power	50000 kVA and below
Voltage Rating	35kV
Number of phases	Three-phase
Frequency	50Hz/60Hz
Vector Group	Dyn11,Yyn0,Yzn11
Tapping range	±5%,±2×2.5%,±3×2.5%
Insulation class	Level A
Insulation level	EN 60076-1
Cooling method	ONAN
Normal service conditions	Altitude: < 1000m; ambient temperature: -30 ° C ~ + 40 ° C; Relative humidity: according to the national standard Note: Special design can be carried out according to the user's requirements beyond the normal use conditions.
Protection Class	EN 60529
Tap Changing Method	Unloaded, loaded

Technical Parameters

*The following table lists typical models. Other ratings and configurations can be customized upon request.

Rated Power (kVA)	Voltage combination and tapping range			Vector Group	Short circuit impedance	No-load loss (W)	Load loss (W)	No-load current (%)	Weight (kg)		Overall dimension (mm)	Gauge (mm)
	High Voltage (kV)	High voltage tapping Range (%)	Low Voltage (kV)						Oil weight	Total weight	L × W × H	
LT-DIST-0.4 | 35kV-0.1 | 50 MVA-ONAN (Amorphous Alloy Distribution Transformer)												
100	10.5 21 35	±5 ±2X2.5	0.4 0.69	Dyn11 Yzn11 Yyn0	4.0	75	1580/1500	0.8	150	580	1065×845×900	550
125						85	1890/1800	0.65	145	620	1065×845×935	550
160						100	2310/2200	0.65	165	730	1190×870×960	550
200						120	2730/2600	0.5	250	1000	1230×905×985	550
250						140	3200/3050	0.5	200	1060	1200×905×970	550
315						170	3830/3650	0.45	280	1150	1300×1100×1100	660
400						200	4520/4300	0.45	300	1350	1355×1090×1030	660
500						240	5410/5150	0.45	330	1600	1750×1010×1070	660
630					4.5	320	6200	0.4	380	1870	1900×1100×1150	820
800						380	7500	0.4	450	2450	2070×1230×1345	820
1000						450	10300	0.35	580	2900	2260×1350×1380	820
1250						530	12000	0.35	720	3800	2360×1350×1445	820
1600						630	14500	0.35	850	5300	2530×1390×1525	820
2000					5.0	750	18300	0.3	1310	6150	2750×1450×1650	820
2500						900	21200	0.3	1850	8200	2900×1510×1780	820
LT-DIST-0.4 | 35kV-0.1 | 50 MVA-ONAN (Double-winding Off-circuit Tap Changing Distribution Transformer, Energy Efficiency Level 1)												
100	10.5 21 35	±5 ±2*2.5	0.4 0.69	Dyn11 Yzn11 Yyn0	4.0	120	1140/1080	0.8	170	800	980×750×1070	550
125						135	1360/1295	0.8	180	1000	1150×850×1080	550
160						160	1665/1585	0.7	200	1200	1280×970×1100	550
200						190	1970/1870	0.7	240	1300	1320×1020×1150	550
250						230	2300/2195	0.7	260	1500	1450×1100×1200	550
315						270	2760/2630	0.6	280	1600	1550×1120×1300	660
400						330	3250/3095	0.6	300	1700	1620×1140×1300	660
500						385	3900/3710	0.6	340	2050	1650×1160×1350	660
630					4.5	460	4460	0.6	420	3000	1680×1180×1400	820
800						560	5400	0.5	560	3500	1700×1200×1600	820
1000						665	7415	0.5	620	4000	2200×1400×1800	820
1250						780	8640	0.5	700	4400	2300×1600×2100	820
1600						940	10440	0.5	750	5100	2400×1900×2300	820
2000					5.0	1085	13180	0.4	800	5400	2500×1950×2400	820
2500						1280	13360	0.4	1200	9300	2700×2000×2750	820
LT-DIST-0.4 | 35kV-0.1 | 50 MVA-ONAN (Double-winding Off-circuit Tap Changing Distribution Transformer, Energy Efficiency Level 2)												
100	10.5 21 35	±5 ±2*2.5	0.4 0.69	Dyn11 Yzn11 Yyn0	4.0	135	1265/1200	0.8	130	640	970×750×1050	550
125						150	1510/1440	0.8	140	750	1120×850×1050	550
160						180	1850/1760	0.7	150	850	1280×970×1050	550
200						215	2185/2080	0.7	190	900	1300×1000×1080	550
250						260	2560/2440	0.7	220	1050	1400×1100×1150	550
315						305	3065/2920	0.6	250	1200	1500×1150×1200	660
400						370	3615/3440	0.6	300	1500	1580×1200×1200	660
500						430	4330/4120	0.6	340	1800	1680×1250×1250	660
630					4.5	510	4960	0.6	280	2200	1700×1300×1300	820
800						630	6000	0.5	370	2600	2100×1400×1700	820
1000						745	8240	0.5	420	3100	2150×1450×1800	820
1250						870	9600	0.5	480	3600	2200×1500×1900	820
1600						1050	11600	0.5	580	4300	2250×1800×2200	820
2000					5.0	1225	14640	0.4	800	5100	2300×2100×2300	820
2500						1440	14840	0.4	860	7200	2350×2200×2300	820

Note: For transformers with a rated capacity of 500 kVA and below, the load loss values above the slash in the table apply to Dyn11 or Yzn11 vector groups, while the values below the slash apply to Yyn0 vector group. The weight and overall dimensions listed in the table are for reference only. Final dimensions shall be subject to the drawings approved after contract confirmation.

LT-TRA Series

OIL-IMMERSED TRANSFORMER
Transmission Network

Voltage: 10.5/21/35-110/220/350/430 kV

Power: 1-200 MVA

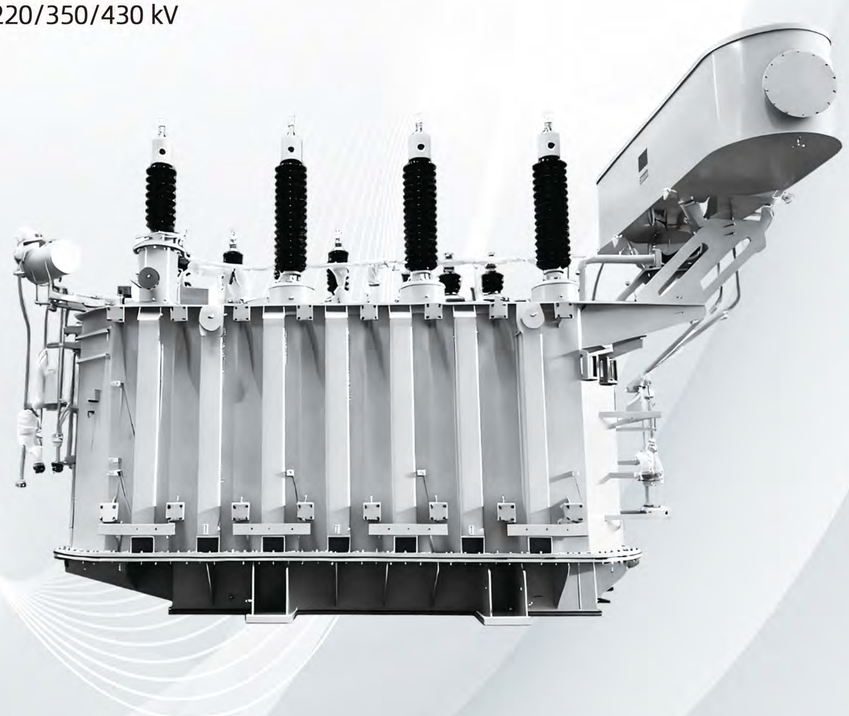

Overview

The LT-TRA series oil-immersed transformers are designed with advanced engineering concepts and optimized materials, structures, and manufacturing processes to deliver superior performance and reliability. In terms of mechanical design, the high-and low-voltage clamping structures are reinforced using steel tension straps or a combination of upper and side beams, forming a robust frame that enhances the core clamping force and provides excellent resistance to transportation shocks. These transformers feature high short-circuit withstand strength, stable operation, low losses, low noise, and an aesthetically refined appearance. Their comprehensive performance meets international advanced standards, offering users a dependable, high-quality solution for transmission network applications.

Structural Features

The transformer core is made of high-quality cold-rolled, grain-oriented silicon steel sheets. The optimized core cross-section has been increased by 1.2 %, improving magnetic efficiency. A precise cutting process ensures burr height below 0.01 mm, while a 45-degree full-mitred joint design aligns magnetic flux with the rolling direction of the steel, effectively reducing no-load loss, no-load current, and noise. The windings and insulation system adopt a newly developed structure that enhances electrical performance, short-circuit strength, and reduces both no-load and load losses. Oil filling is performed under vacuum conditions, ensuring excellent impregnation and significantly improving insulation reliability.

Technical Parameters

LT-TRA-10.5|430kV-1|200MVA-ONAN/OFAN

*The following table lists typical models. Other ratings and configurations can be customized upon request.

Rated Power (kVA)	Voltage combination		Vector Group	No-load loss (kW)	Load loss (kW) 75 ℃	No-load current (%)	Short circuit impedance (%)
	High Voltage (kV)	Low Voltage (kV)					
6300	110±8×1.25%	10.5 21 35	YNd11	10.0	36	0.80	10.5
8000				12.0	45	0.80	
10000				14.2	53	0.74	
12500				16.8	63	0.74	
16000				20.2	77	0.69	
20000				24.0	93	0.69	
25000				28.4	110	0.64	
31500				33.8	133	0.64	
40000				40.4	156	0.58	
50000				47.8	194	0.58	
63000				56.8	234	0.52	
31500	220±8×1.25%			38	135	0.70	12-14
40000				45	157	0.63	
50000				54	189	0.56	
63000				63	220	0.56	
90000				80	288	0.49	
120000				99	346	0.49	
150000				116	405	0.42	
180000				135	468	0.42	
120000				102	355	0.49	
150000				120	415	0.42	
180000				140	475	0.42	

OIL-IMMERSED TRANSFORMER
Wind Power

Voltage: 0.69-10.5/21/35 kV

Power: 3-10 MVA

LT-WND Series

Overview

To address the core challenge of low-voltage power transmission in wind power generation, the LT-WND series oil-immersed transformers provide a dedicated step-up solution for efficient grid integration of wind energy. The transformer increases the generator output voltage from 690 V to 10.5 kV or 35 kV, enabling reliable transmission via underground cables or overhead lines to the wind farm's main substation-forming a key link between generation and transmission. With its high-voltage and large-capacity design, the LT-WND series ensures stable operation under fluctuating wind conditions and offers high reliability for both utility-scale wind farms and distributed wind systems. It supports 50 Hz and 60 Hz operation in new energy power systems up to 35 kV, with rated capacities ranging from 3,000 to 10,000 kVA, making it an ideal choice for wind and photovoltaic power distribution applications.

Service Conditions

- **Altitude:** below 3000 m
- **Ambient temperature:** –40 °C to +50 °C
- **Relative humidity:** daily average ⩽ 95%, monthly average ⩽ 90%
- **Seismic level:** horizontal acceleration 0.4 m/s^2
- **Installation environment:** free from corrosive and flammable gases; installation site free from severe vibration.

Technical Parameters

LT-WND-0.69|35kV-3|10MVA-ONAN

*The following table lists typical models. Other ratings and configurations can be customized upon request.

Rated Power (kVA)	Voltage combination and tapping range			Vector Group	Short circuit impedance (%)	No-load loss (kW)	Load loss (W)	No-load current (%)	Weight (kg)		Overall dimension (mm)
	High Voltage (kV)	High voltage tapping Range (%)	Low Voltage (kV)						Oil weight	Total weight	L × W × H
3000	10.5 21 35	±2×2.5	0.69	Dyn11	7.0 ~ 10.0	1600	20600	0.30	2150	11270	2400×2360×3030
4000						2000	24600	0.30	2450	13270	2550×2410×3130
5000						2400	28200	0.28	2770	15250	2600×2470×3210
5500						2600	30300	0.28	2950	17120	2680×2520×3280
6300						2900	31500	0.28	3370	19520	2750×2560×3330
7100						3420	32960	0.25	3400	20330	2800×2660×3630
8000						4000	34600	0.25	3720	22980	2980×2720×3780
10000						4800	40800	0.22	3870	24670	3080×2810×3850

LINDEMANN-REGNER www.lindemann-regner.de

LINDE-GREEN-OIL TRANSFORMER

LINDE-GREEN-OIL

- Environmentally Friendly Transformer Technology Using Natural Ester Oils

Our oil-immersed transformers are designed to meet the demands of the green energy transition and are fully compatible with environmentally friendly natural ester insulation oils. Derived from renewable plant sources, these oils offer clear advantages over mineral oil: they are sustainable, fire-resistant, and extend transformer lifetime. As a renewable insulating and cooling medium, they establish a new benchmark for eco-friendly power equipment.

Core Configuration

- **Filling medium**
  Eco-friendly natural ester insulation oil based on rapeseed, soybean, or camellia seed oil
- **Compatible models**
  Conventional and amorphous oil-immersed transformers
- **Key parameters**
  Voltage 10 kV-430 kV, power rating up to 420 MVA, vector group YNd11

Compliance Standards

- Fully compliant with European safety standard EN 61558-1 and certifications related to natural ester insulating

Core Advantages

Environmental performance

Over 98 % biodegradation within 21 days, non-toxic and pollution-free; CO_2 emissions only 1/64 that of mineral oil

Safety

Flash point 300 – 360 °C, significantly higher than mineral oil, minimizing fire risk

Durability

Slows insulation paper aging; service life of 40 – 60 years (over 30 % longer than conventional transformers)

Efficiency

Supports 1.5–2× overload operation; no-load loss reduced by 25 – 60 %; noise level reduced by 7–10 dB(A)

Technical Features

- **Process and cooling:** Fully sealed structure with vacuum oil-filling; supports ONAN (oil natural air natural) and ONAF (oil natural air forced) cooling modes
- **Operating conditions:** −15 °C to +40 °C, altitude ⩽ 2,000 m, relative humidity ⩽ 90 % (at 25 °C)
- **Protection configuration:** Oil-level and winding temperature controllers, gas relay

LT-ESS Series

DRY TYPE TRANSFORMER

Energy Storage

Voltage: 0.69-10.5/21/35 kV

Power: 1000-5000 kVA

Overview

The LT-ESS series dry-type transformers achieve a breakthrough in overall performance through multiple technical enhancements. They feature a new winding structure combined with a specialized heat-dissipation system and flexible high-/low-voltage connection options.

This design provides high reliability and a compact structure, making the transformers well suited for integration in modern energy-storage and renewable-energy systems.

They also offer strong overload capability, excellent thermal shock resistance, and high tolerance to harmonic distortion, while maintaining low losses and high operational efficiency to ensure stable performance under various operating conditions.

Service Conditions

- **Altitude:** below 3000 m
- **Ambient temperature:** –40 °C to +50 °C
- **Relative humidity:** daily average ⩽ 95 %, monthly average ⩽ 90 %
- **Seismic level:** horizontal acceleration 0.4 m/s²
- **Installation environment:** ambient air shall be free from corrosive or flammable gases; the installation site shall be free from severe vibration.

Technical Parameters

LT-ESS-0.69|10.5kV-1|5MVA-DRY-AA

*The following table lists typical models. Other ratings and configurations can be customized upon request.

Rated Power (kVA)	Voltage combination		Short circuit impedance (%)	No-load loss (W)	Load loss (W)	No-load current (%)	Body size (mm)	Overall dimension (mm)
	High Voltage (kV)	Low Voltage (kV)					L × W × H	L × W × H
1000	10.5	0.69	Dyn11/Yyn0	6	1020	6430	1510*1020*1110	1900*1500*1800
1250					1205	7610	1540*1020*1160	1900*1500*1800
1600					1415	9230	1650*1150*1230	2000*1600*2000
2000					1760	11420	1730*1150*1330	2000*1600*2000
2500					2080	13540	1810*1150*1370	2200*1600*2000

LT-ESS-0.69|21kV-1|5MVA-DRY-AA

*The following table lists typical models. Other ratings and configurations can be customized upon request.

Rated Power (kVA)	Voltage combination		Short circuit impedance (%)	No-load loss (W)	Load loss (W)	No-load current (%)	Body size (mm)	Overall dimension (mm)
	High Voltage (kV)	Low Voltage (kV)					L × W × H	L × W × H
1000	21	0.69	Dyn11/Yyn0	6	2070	8540	1700*1070*1563	2300*1650*2165
1250					2380	10040	1760*1270*1621	2400*1700*2300
1600					2790	12050	1900*1270*1781	2500*1800*2400
2000					3240	14230	2060*1270*2081	2700*1800*2500
2500					3870	16850	2260*1270*2016	2800*1900*2700

LT-ESS-0.69|35kV-1|5MVA-DRY-AA

*The following table lists typical models. Other ratings and configurations can be customized upon request.

Rated Power (kVA)	Voltage combination		Short circuit impedance (%)	No-load loss (W)	Load loss (W)	No-load current (%)	Body size (mm)	Overall dimension (mm)
	High Voltage (kV)	Low Voltage (kV)					L × W × H	L × W × H
1000	35	0.69	Dyn11/Yyn0	6	2430	9100	2070×1200×1980	2870×1900×2350
1250					2840	11000	2180×1400×2000	2980×2000×2450
1600					3240	13400	2000×1300×2270	2800×2000×2650
2000					3825	15928	2130×1300×2340	3200×2200×2700
2500					4460	18641	2240×1400×2370	3000×2000×2700

DRY TYPE TRANSFORMER
Power Distribution

Voltage: 0.4/0.69-10.5/21/35 kV

Power: 100-50000 kVA

LT-DIST Series

Overview

The LT-DIST series dry-type transformers are designed for three-phase, 50 Hz distribution networks, serving as the key interface for voltage conversion between the primary and secondary sides of the grid. Equipped with an integrated temperature controller, the transformer continuously monitors winding temperature and provides dual protection through over-temperature alarm and trip functions, ensuring safe operation within the thermal limit. This design effectively prevents overheating, enhances operational safety, and extends the service life of the transformer in long-term distribution applications.

Service Conditions

- **Altitude:** < 3000 m
- **Ambient temperature:** –40 °C to +50 °C
- **Relative humidity:** daily ⩽ 95 %, monthly ⩽ 90 %
- **Seismic level:** horizontal acceleration 0.4 m/s²
- **Installation environment:** free from corrosive or flammable gases; site without strong vibration.

Technical Parameters

LT-DIST-0.4|35kV-0.1|50MVA-DRY-AA/AF

*The following table lists typical models. Other ratings and configurations can be customized upon request.

Rated Power (kVA)	Voltage Combination		Short circuit impedance (%)	No-load Loss (kW)	Load Loss (kW) 75 °C	Rail Gauge m × n	Dimensions L × B × H (mm)	Side Outlet Enclosure Size
	High Voltage (kV)	Low Voltage (kV)						
100	35	0.4 0.69	4	230	1240	550×550	1050×750×790	1700×1400×2200
125				270	1450	550×550	1050×750×830	1700×1400×2200
160				310	1670	550×550	1100×750×880	1700×1400×2200
200				360	1990	660×660	1090×750×900	1700×1400×2200
250				415	2170	660×660	1150×860×940	1700×1400×2200
315				510	2730	660×660	1180×860×970	1700×1400×2200
400				570	3140	660×660	1290×860×990	1700×1400×2200
500				670	3830	660×660	1260×860×1030	1700×1400×2200
630				775	4610	820×660	1300×80×1120	1900×1500×2200

(Table continued on next page)

Rated Power (kVA)	Voltage Combination		Short circuit impedance (%)	No-load Loss (kW)	Load Loss (kW) 75 °C	Rail Gauge m × n	Dimensions L × B × H (mm)	Side Outlet Enclosure Size
	High Voltage (kV)	Low Voltage (kV)						
630	35	0.4 0.69	6	750	5690	820×660	1390×860×1060	1900×1500×2200
800				875	5470	820×820	1450×1020×1070	1900×1500×2200
1000				1020	6430	820×820	1510×1020×1110	1900×1500×2200
1250				1205	7610	820×820	1540×1020×1160	1900×1500×2200
1600				1415	9230	820×1070	1650×1150×1230,	2000×1600×2200
2000				1760	11420	1070×1070	1730×1150×1330	2000×1600×2200
2500			8	2080	13540	1070×1070	1810×1150×1370	2200×1600×2200
1600				1415	10160	820×1070	1650×1150×1190	2000×1600×2200
2000				1760	12530	1070×1070	1730×1150×1300	2000×1600×2200
2500				2080	14830	1070×1070	1810×1150×1320	2200×1600×2200

LT-DIST-0.4|21kV-0.1|50MVA-DRY-AA/AF

*The following table lists typical models. Other ratings and configurations can be customized upon request.

Rated Power (kVA)	Voltage Combination		Short circuit impedance (%)	No-load Loss (kW)	Load Loss (kW) 75 °C	Rail Gauge m × n	Dimensions L × B × H (mm)	Side Outlet Enclosure Size
	High Voltage (kV)	Low Voltage (kV)						
200	21	0.4 0.69	6	730	2565	660×660	1425×860×1184	1650×1400×1660
250				840	2985	820×660	1450×860×1317	2000×1400×1660
315				970	3560	820×820	1460×1020×1339	2000×1400×1865
400				1150	4225	820×820	1490×1020×1344	2100×1450×1965
500				1350	5055	820×820	1580×1070×1471	2100×1450×1965
630				1530	5970	820×820	1580×1070×1616	2200×1500×2065
800				1750	7210	820×820	1580×1070×1681	2300×1550×2065
1000				2070	8540	820×820	1700×1070×1563	2300×1650×2165
1250				2380	10040	1070×1070	1760×1270×1621	2400×1700×2300
1600				2790	12050	1070×1070	1900×1270×1781	2500×1800×2400
2000				3240	14230	1070×1070	2060×1270×2081	2700×1800×2500
2500				3870	16850	1070×1070	2260×1270×2016	2800×1900×2700

LT-DIST-0.4|35kV-0.1|50MVA-DRY-AA/AF

*The following table lists typical models. Other ratings and configurations can be customized upon request.

Rated Power (kVA)	Voltage Combination		Short circuit impedance (%)	No-load Loss (kW)	Load Loss (kW) 75 °C	Rail Gauge m × n	Dimensions L × B × H (mm)	Side Outlet Enclosure Size
	High Voltage (kV)	Low Voltage (kV)						
250	35	0.4 0.69	6	990	3250	820×820	1470×1000×1591	2300×1700×2000
315				1180	3900	820×820	1580×1100×1870	2600×1800×2300
400				1380	4700	820×820	1790×1100×1700	2600×1800×2100
500				1620	5700	820×820	1620×1100×1930	2420×1800×2300
630				1860	6600	820×820	1720×1100×1970	2520×1900×2350
800				2160	7800	820×820	1840×1200×2000	2650×1900×2350
1000				2430	9100	1070×820	2070×1200×1980	2870×1900×2350
1250				2840	11000	1070×1070	2180×1400×2000	2980×2000×2450
1600				3240	13400	1070×1070	2000×1300×2270	2800×2000×2650
2000				3825	15928	1070×1070	2130×1300×2340	3200×2200×2700
2500				4460	18641	1070×1070	2240×1400×2370	3000×2000×2700

MEGACUBE™ SERIES

Overview

The MegaCube series combines a prefabricated E-House with a containerized battery cabinet to form a highly integrated, factory-assembled storage system available in modular capacities such as 5 MWh and 10 MWh. All key components, internal wiring, communication configurations, and full system-level commissioning are completed under controlled conditions in the factory, ensuring optimal performance at delivery. The system is designed in compliance with leading IEC and UL standards and supports communication protocols such as Modbus and IEC 61850, enabling direct interoperability with European and North American grid and monitoring environments. No complex on-site installation or commissioning is required. After basic placement and connection, the system is ready to operate, delivering a true plug-and-play deployment experience.

Key Advantages

Exceptional Installation Efficiency With Dramatically Shorter Project Timelines

Thanks to fully pre-assembled and factory-tested system modules, installation time is significantly shortened. A 5-MWh storage system can be installed within 48 hours, while a 10-MWh system requires only 72 hours. Compared with traditional on-site assembly and commissioning, total project duration is reduced by more than 80 percent, minimizing construction-related delays and enabling faster project energization.

Short Delivery Cycles That Safeguard Project Schedules

Backed by a mature supply chain and streamlined manufacturing processes, the total lead time from order placement to delivery at European project sites does not exceed 15 weeks. This is well below industry averages and provides predictable timelines that improve overall project planning and execution efficiency.

Plug-And-Play Design That Lowers On-Site Requirements

All wiring, testing, and system integration work is completed at the factory. At the project site, only basic mechanical placement and electrical connection are required. This eliminates the need for specialized technical teams on location and significantly reduces manpower and equipment costs associated with on-site commissioning.

Designed For Compliance With European And North American Standards

The system is engineered and tested according to major IEC and UL standards, as well as widely used communication protocols such as Modbus and IEC 61850. It can be integrated directly into European and North American grid infrastructures and supervisory platforms without additional adaptation, ensuring smooth market entry and compatibility.

Factory-Level Commissioning For Enhanced System Reliability

Unlike on-site commissioning, which is affected by environmental and logistical variables, factory testing takes place in controlled conditions with stable temperature and humidity. Professional testing equipment enables comprehensive multi-scenario simulations that identify and resolve potential issues early. The system reaches optimal operating status before shipment, significantly improving long-term reliability and reducing O&M costs.

Integrated Architecture Adaptable To Diverse Applications

The combination of an E-House structure and modular containerized battery cabinets provides a highly integrated and easily transportable solution. It is suitable for off-grid energy storage in remote areas as well as urban peak-shaving projects. Its modularity allows flexible deployment across a wide range of operational environments.

Fully Certified

The entire series has EU CE certification and US UL certification, and meets the additional certification requirements of European member states such as Germany VDE.

MEGACUBE™
ESS+E-House Set

Capacity: 5MWh

Voltage: 0.69-10.5/21/35kV

Power: 2500 kW

5MWh-2500kW

Product Introduction

MegaCube LM-5MWH features an integrated "battery container + E-House" design: PCS, dry/oil-type transformer and RMU come pre-installed inside the E-House, while DC bus, protection and SCADA are factory-wired and commissioned. Fully compliant with IEC/UL and mainstream protocols (Modbus, IEC 61850), the system arrives plug-and-operate—only basic setting and grid hookup are required on site. It delivers fast deployment, predictable quality and high reliability for C&I peak-shaving, campus storage and distribution-level flexibility. As a modular capacity unit within the MegaCube family, it keeps your upgrade path straightforward.

Technical Parameters

LM-5MWh|2.5MW-0.69|10.5-35kV

System Overview			
Rated energy	5.016 MWh	Rated power	2.5 MW-3MW
DC Voltage	1330V	AC Voltage	0.69 - 10.5/21/35kV
System Architecture	Battery container + E-house container (PCS + transformer + RMU)	Dimension	6058×2438×2896 + 6058×2438×2591
Weight	55t	IP level	IP55 + IP54 (converter IP65)
Battery Energy Storage			
Layout	1 × C173F5016		
Nominal Capacity	5.016 MWh	CH/DCH Rate	0.5/0.5 C
Nominal Voltage	1330 V	Voltage Range	1160-1480 V
Maximal Current	2160 A @Vmin	Cycle Life	≥6000 cycles @80% SOH
Service Life	20 years	Charging Temperature	20-50 ℃
Dimension	6058×2438×2896 mm	Discharging Temperature	10-50 ℃
Weight	43 t	Storage Temperature	-30-55 ℃
IP Level	IP55	Relative Humidity	≤95%(non-condensing)
Altitude	≤3000 m		
PCS			
Layout	2 parallel × EH-1725-HA-UD		
Max. DC Voltage	1500 V	DC Voltage Range	1000-1500 V
Max. DC Current(per PCS)	1936 A	System DC Current Capability	3872 A
DC Loading Ratio	56%	DC Operating Margin	43%
AC Output Power(per PCS)	1897.5kVA@30℃, 1725kVA@45℃, 1509kVA@50℃	System AC Output Power	3795kVA@30℃, 3450kVA@45℃, 3018kVA@50℃
Max. AC Output Current(per PCS)	1588A@30℃, 1443A@45℃, 1263A@50℃	System max. AC Output Current	3176A@30℃, 2886A@45℃, 2526A@50℃
Nominal AC Voltage	690V,3W+PE	AC Voltage Range	607-759 V
Nominal Grid Frequency	50/60 Hz	Harmonic (THD)	<1.5% at 100% load
Power Factor	-1 to +1	Ingress Protection rating	IP65 (converter)
Max. Efficiency	99%	European Efficiency	98.5%
Cooling	Forced air	Operating Temperature Range	-40-+60 ℃ (derating above 45 ℃)
Relative Humidity	0-100% (non-condensing)	Max Altitude	5000 m (derating above 3000 m)
Dimension	2300×1435×2350 mm	Weight	2800 kg
Transformer			
Isolation mode	Dry/Oil type	Rated Power	3.15 MVA
LV/MV	0.69/21kV (Optional: 11/35kV)	Transformer Vector	Dyn11
RMU (Optional)			
Rated Voltage	24 kV	3s Short-time Withstand Current	21 kA / 3 s
Rated Frequency	50/60 Hz	Peak Making Current	54.6 kA
Rated Power Freq Withstand (1 min)	50/60 kV	Grounding Circuit Making Current	21/54.6 kA（rms/peak）
Lightning Impulse Withstand	125/145 kV	Short-circuit Breaking Current	21 kA
Rated Current	630 A	Earth Fault Current	48 A
Internal Arcing Level	AFLR	Enclosure Protection Class	IP54/IP4X
Protection Grade of Airbox	IP67	Gas	SF6 or Eco Air

MEGACUBE™
ESS+E-House Set

Capacity: 10MWh

Voltage: 0.69-10.5/21/35kV

Power: 5000 kW

10MWh-5000kW

Product Introduction

MegaCube LM-10MWH scales up with two battery containers in parallel and multiple PCS in parallel housed inside the E-House, while the main transformer is an outdoor oil-immersed unit to accommodate higher apparent power and thermal headroom. Despite the larger rating, on-site work remains light thanks to full factory pre-assembly and testing. It targets distribution-level peak shaving, VPP participation and rapid capacity growth—maintaining drop-in compatibility with the 5 MWh module at interface and controls level.

Technical Parameters

LM-10MWh|5MW-0.69|10.5-35kV

System Overview			
Rated energy	10.032 MWh	Rated power	5MW
DC Voltage	1330 V	AC Voltage	0.69 - 10.5/21/35kV
System Architecture	2 Battery container + E-house container (PCS + RMU) + transformer	Dimension	6058×2438×2896 + 6058×2438×2896 + 6058×2438×2591 + 3420X3070X3000
Weight	113t	IP level	IP55 + IP54 (converter IP65)
Battery Energy Storage			
Layout	2 × C173F5016		
Nominal Capacity	10.032 MWh	CH/DCH Rate	0.5/0.5 C
Nominal Voltage	1330 V	Voltage Range	1160–1480 V
Maximal Current	4320 A @Vmin	Cycle Life	≥6000 cycles @80% SOH
Service Life	20 years	Charging Temperature	20–50 ℃
Dimension (per Container)	6058×2438×2896 mm	Discharging Temperature	10–50 ℃
Weight (per Container)	43 t	Storage Temperature	-30–55 ℃
IP Level	IP55	Relative Humidity	≤95%(non-condensing)
Altitude	≤3000 m		
PCS			
Layout	3 parallel × EH-2000-HA-UD		
Max. DC Voltage	1500 V	DC Voltage Range	1000–1500 V
Max. DC Current(per PCS)	2245 A	System DC Current Capability	6735 A
DC Loading Ratio	65%	DC Operating Margin	35%
AC Output Power(per PCS)	2200kVA@30℃, 2000kVA@45℃, 1750kVA@50℃	System AC Output Power	6600kVA@30℃, 6000kVA@45℃, 5250kVA@50℃
Max. AC Output Current(per PCS)	1841A@30℃, 1674A@45℃, 1465A@50℃	System max. AC Output Current	5523A@30℃, 5022A@45℃, 4395A@50℃
Nominal AC Voltage	690V,3W+PE	AC Voltage Range	607–759 V
Nominal Grid Frequency	50/60 Hz	Harmonic (THD)	<1.5% at 100% load
Power Factor	-1 to +1	Ingress Protection rating	IP65 (converter)
Max. Efficiency	99%	European Efficiency	98.5%
Cooling	Forced air	Operating Temperature Range	-40–+60 ℃ (derating above 45 ℃)
Relative Humidity	0–100% (non-condensing)	Max Altitude	5000 m (derating above 3000 m)
Dimension	3450×1435×2350 mm	Weight	4200 kg
Transformer			
Isolation mode	Oil-immersed	Rated Power	6.3 MVA
LV/MV	0.69/21kV(Optional: 11/35kV)	Transformer Vector	Dyn11
Overall Dimension	3420X3070X3000 mm	Oil Type	natural ester oil
RMU (Optional)			
Rated Voltage	24 kV	3s Short-time Withstand Current	21 kA / 3 s
Rated Frequency	50/60 Hz	Peak Making Current	54.6 kA
Rated Power Freq Withstand (1 min)	50/60 kV	Grounding Circuit Making Current	21/54.6 kA（rms/peak）
Lightning Impulse Withstand	125/145 kV	Short-circuit Breaking Current	21 kA
Rated Current	630 A	Earth Fault Current	48 A
Internal Arcing Level	AFLR	Enclosure Protection Class	IP54/IP4X
Protection Grade of Airbox	IP67	Gas	SF6 or Eco Air

E-HOUSE
Energy Storage

Voltage: 0.69-10.5/21/35 kV

Power: 1000-5000 kVA

LS2750/3150/3450UD-MV

Product Features

Efficient Conversion
- Three-level topology, maximum efficiency up to 99%
- Intelligent air cooling, no derating at 45 °C ambient temperature
- Wide DC operating voltage range, full-load operation up to 1500 V

Safe And Reliable
- High protection level (IP65, optional C5 corrosion protection)
- DC side short-circuit current breaking capacity up to 250 kA
- Coordinated operation with BMS and EMS, supporting multiple system protections

Flexible Application
- Four-quadrant operation with battery charge/discharge management
- Supports VSG, VF, and PQ operation modes
- Hundreds of MW off-grid parallel operation, capable of independent grid black start

Grid Support
- Supports primary frequency regulation and fast dispatch between source, grid, and load
- Stable operation with SCR = 1.018, excellent grid adaptability
- Complies with IEC 61850 protocol and supports fast power response (< 20 ms)

Circuit Block Diagram

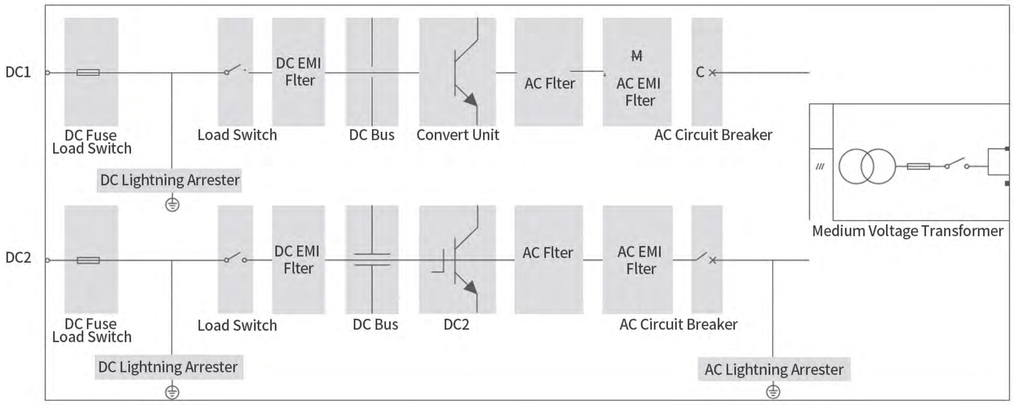

Technical Parameters

PRODUCT MODEL	LS2750UD-MV	LS3150UD-MV	LS3450UD-MV
DC SIDE			
Maximum DC voltage		1500V	
Minimum DC voltage	800V	915V	1000V
Rated power DC voltage operating range	800~1500V	915~1500V	1000~1500V
Maximum DC operating current		1935A×2	
Number of DC input channels		2	
AC SIDE (GRID-CONNECTED)			
Rated output @ 45 °C	2750kVA	3150kVA	3450kVA
Maximum output @ 30 °C	3025kVA	3465kVA	3795kVA
Maximum AC current at converter port		1587A×2	
Rated AC Voltage at Converter Port	550V	630V	690V
AC Voltage Range at Converter Port	467.5~605V	535.5~693V	586.5~759V
Rated Grid Frequency / Grid Frequency Range		50Hz / 45~55Hz	
AC Current Harmonics		< 3% (at rated power)	
Power factor		> 0.99 at rated power	
Reactive Power Adjustable Range		-105%~105%	
Number of feed phases/number of output phases		3 / 3	
AC SIDE (OFF-GRID)			
Rated AC Voltage at Converter Port	550V	630V	690V
AC Voltage Range at Converter Port	467.5~605V	535.5~693V	586.5~759V
AC voltage harmonics		< 3% (linear load)	
DC voltage component		< 0.5% Un (linear balanced load)	
Unbalanced load capacity		100%	
Rated grid frequency/grid frequency range		50Hz / 45~55Hz	
EFFICIENCY			
Maximum Converter Efficiency		99%	
TRANSFORMER			
Rated transformer power	2750kVA	3150kVA	3450kVA
Maximum transformer power	3025kVA	3465kVA	3795kVA
LV/MV voltage	0.55kV / 37kV	0.63kV / 37kV	0.69kV / 37kV
Transformer connection group		Dy1 or Dy11	
PROTECTION			
DC input protection	Load switch + fuse		
Converter output protection	Circuit Breaker		
AC output protection	Load switch + fuse		
Surge protection	DC Type II / AC Type II		
Grid monitoring/ground fault monitoring	Yes/Yes		
Insulation monitoring	Have		
Overtemperature protection	Have		
GENERAL PARAMETERS			
Dimensions (W × H × D)	6140×2515×2515mm		
Weight	14T		
Protection degree	IP54 (converter IP65)		
Operating temperature range	-35 ~ 60 °C (> 45 °C derating operation)		
Relative humidity range	0~100%		
Converter cooling method	Intelligent forced air cooling		
Maximum Operating Altitude	4000m (> 2000m derating)		
Display	LED，WLAN+WEB HMI		
Communication	RS485，CAN，Ethernet		
Standards compliance	GB/T 34120，GB/T 34133		
Grid support	L/HVRT, L/HFRT, active and reactive power control, power slope control		

*Specifications and dimensions are subject to change without prior notice. The latest documentation shall prevail.

LS5000UD-MV-P3

E-HOUSE
Power Distribution Network

Voltage: 0.4/0.69-10.5/21/35 kV

Power: 100-50000 kVA

Product Features

Efficient Conversion
- Three-level topology, maximum efficiency up to 99%
- Intelligent air cooling, maximum operating temperature 60°C

Safe And Reliable
- High protection level IP55/C5
- Online insulation monitoring ensures safety
- Coordinated operation with BMS and EMS, supporting multiple system protections

Flexible Application
- Hundred-megawatt-class off-grid parallel operation, capable of independent grid black start, supporting VSG, VF, and PQ operation modes
- Supports operation in various environments such as high altitude, high salinity, high temperature, and extreme low temperature

Grid Support
- Fast active/reactive power response, supporting coordinated control of generation, grid, load, and storage
- Strong weak-grid adaptability, stable operation with SCR = 1.015
- Provides inertia support and microsecond-level voltage formation capability for grid-forming applications

Circuit Block Diagram

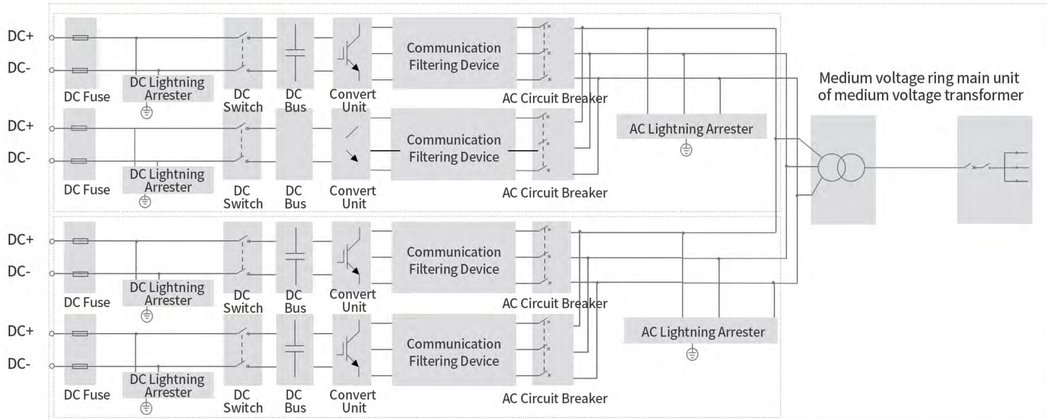

Technical Parameters

PRODUCT MODEL	LS5000UD-MV-P3
GENERAL PARAMETERS	
Dimensions (W * H * D)	7500 mm * 2915 mm * 3200 mm
Weight	20000 kg
Protection Degree	IP55
Operating temperature range	-35 ℃ ~ 60 ℃
Relative humidity range	0 % ~ 100 %
Maximum operating altitude	5000 m
Communication interface	RS485, Ethernet, CAN
Communication protocol	Modbus TCP, IEC 104, IEC 61850
Standards Compliance	GB/T 34120, GB/T 34133
DC SIDE	
DC Voltage Operating Range	1000 V ~ 1500 V
Maximum current	2806 A * 2 / 1403 A * 4
Number of DC Inputs	2 / 4
AC SIDE (GRID-CONNECTED)	
Rated power	5000 kW
Maximum power	5500 kW
Maximum AC current at converter port	2302 A * 2
Rated AC Voltage at Converter Port	690 V
AC Voltage Range at Converter Port	586.5 V ~ 759 V
Rated Grid Frequency	50 Hz
Grid Frequency Range	45 Hz ~ 55 Hz
Current harmonics	< 3% (rated power)
Power Factor (Adjustable Range)	> 0.99 (rated power)/-1 ~ 1
Reactive Power Adjustable Range	-105 % ~ 105 %
AC SIDE (OFF-GRID)	
Rated AC Voltage at Converter Port	690 V
AC Voltage Range at Converter Port	586.5 V ~ 759 V
AC voltage harmonics	< 3% (linear load)
DC voltage component	< 0.5% Un (linear balanced load)
Unbalanced load capacity	100% (linear load)
Rated grid frequency	50 Hz
Grid frequency range	45 Hz ~ 55 Hz
CONVERTER EFFICIENCY	
Maximum converter efficiency	99 %
TRANSFORMER PARAMETERS	
Rated power	5000 kVA
Voltage transformation ratio	37 kV / 0.69 kV
Connection Group	Dy11

*Specifications and dimensions are subject to change without prior notice. The latest documentation shall prevail.

MEDIUM VOLTAGE CABINET/RING MAIN UNIT

Clean Air Ring Main Unit (RMU)

Voltage: 12/24 kV

Power: 630 A

LE-RMU-ARI Ring Main Unit

Product Introduction

The LE-RMU-ARI Series Clean Air Insulated Ring Main Unit (RMU) is a newly developed switchgear based on years of experience in designing and manufacturing fully gas-insulated systems, combined with advanced international technology.

Utilizing clean air insulation and vacuum arc extinguishing technology, it represents a new generation of environmentally friendly medium-voltage switchgear.

Its innovative design concept and advanced global manufacturing process ensure outstanding performance throughout the entire lifecycle—from production, operation to end-of-life recycling-embodying the principles of energy efficiency and sustainability.

Compact, maintenance-free, easy to operate, and highly reliable, the LE-RMU-ARI provides an ideal green and energy-saving alternative to SF6-insulated and solid-insulated switchgear for modern power distribution networks.

Operating Environment

- Altitude: 2000 m and below (for installations above 2000 m, please contact the manufacturer for customized
- design) Maximum ambient temperature: +55°C
- Minimum ambient temperature: –25°C
- Solar radiation intensity: 0.1 W/cm² (wind speed: 0.5 m/s)
- Maximum daily temperature variation: 25 K
- Indoor relative humidity: daily average ≤95%, monthly average ≤90%
- Maximum wind speed: 35 m/s (note: wind speed refers to the 10-minute average at 10 m above ground level)
- Load condition: simultaneous occurrence of 10 mm ice coating and 17.5 m/s wind speed
- Seismic resistance: horizontal ground acceleration 0.2 g, vertical acceleration 0.1 g acting simultaneously. Tested using resonance, sinusoidal, and beat-wave methods: 5 excitations, 5 waves each, with 2 s intervals.
- Safety factor not less than 1.67.

The induced electromagnetic interference voltage in the secondary system shall not exceed 1.6 kV.

Technical Features

- All high-voltage live parts are completely sealed in a stainless steel gas tank, using clean air as the insulation medium between phases, to ground, and in isolation compartments. The entire switchgear is unaffected by external environmental conditions. Circuit breaker, load switch, and earthing operations all use vacuum interrupters. The vacuum circuit breaker unit replaces the traditional load switch + fuse combination, enabling fault interruption at an early stage. A dedicated pressure relief channel can discharge high-temperature and high-pressure gas safely outdoors, ensuring reliable and maintenance-free operation throughout the product's lifetime.
- Compact structure and small footprint, suitable for installation in space-constrained locations.
- The gas tank is made of 3 mm 304 stainless steel and processed with TRUMPF laser cutting and welding machines from Germany. It withstands internal pressure up to 0.24 MPa, ensuring personnel and equipment safety during internal arc faults. Excellent gas tightness and a refined appearance.
- Gas tanks are tested and filled using SEILER's fully automated helium leak detection and gas-filling systems from Germany, ensuring a leakage rate ≤0.1% per year and clean air purity of 99.99%. The design guarantees a service life of up to 40 years.
- Modular design with multiple configuration options — single-tank or combined units, with side or top extensions, or both. The extension busbars are fully enclosed and coated with conductive paint for grounding, ensuring safety and reliability.
- Mechanical and electrical interlocks provide dual protection, preventing faults due to misoperation.
- Mechanical endurance: vacuum circuit breaker – 10,000 operations; load switch – 5,000 operations; three-position (isolation/earthing) switch – 3,000 operations; earthing switch – 5 short-circuit making operations.
- Equipped with advanced temperature rise and gas density monitoring devices, current/voltage monitoring system, and automation solutions enabling unattended substation operation and full SCADA ("Five Remote") functionality.
- Manufactured in clean workshops with fully automated assembly lines and complete factory testing equipment, ensuring consistent product quality and reliability.

Technical Parameters

LE-RMU-AIR-12 kV	630A	Unit	Vacuum Circuit Breaker Panel	Load Break Switch Panel
Rated voltage	kV	12	
Rated frequency	Hz	50	
Rated power frequency withstand voltage (1min)	kV	42/48	
Rated lightning impulse withstand voltage (peak)	kV	75/85	
Rated current	A	630	630
Main and Earthing Circuit Short-time Withstand Current (3 s) (peak)	kA	20/50	20/50
Earthing Connection Short-time Withstand Current (2 s) (peak)	kA	17.4/43.5	17.4/4
Main Circuit Short-circuit Making Current (peak)	kA	50	50
Earthing Circuit Short-circuit Making Current (peak)	kA	50	50
Rated short-circuit breaking current	kA	20	
Rated cable charging breaking current	A		40
Rated earth fault current	A		120
Earth fault cable charging current	A		69.3
Mechanical Endurance	Times	10000	10000
Electrical Endurance	Level	E2	E3
Internal Arc Class	kA/s	20/0.5	20/0.5
Annual Gas Leakage Rate	V/V	≤ 0.01%	
Gas Tank Protection Degree	IP	IP67	
Enclosure Protection Degree	IP	IP4X	

Technical Parameters

LE-RMU-AIR-24 kV	630A	Unit	Vacuum Circuit Breaker Panel	Load Break Switch Panel
Rated voltage	kV	24	
Rated frequency	Hz	50/60	
Rated power frequency withstand voltage (1min)	kV	50/60	
Rated lightning impulse withstand voltage (peak)	kV	125/145	
Rated current	A	630	630
Main and Earthing Circuit Short-time Withstand Current (3 s) (peak)	kA	21 / 54.6	21 / 54.6
Earthing Connection Short-time Withstand Current (2 s) (peak)	kA	21 / 54.6	21 / 54.6
Main Circuit Short-circuit Making Current (peak)	kA	54.6	54.6
Earthing Circuit Short-circuit Making Current (peak)	kA	54.6	54.6
Rated short-circuit breaking current	kA	21	
Rated cable charging breaking current	A	31.5	16
Rated earth fault current	A		48
Earth fault cable charging current	A		27.7
Mechanical Endurance	Times	10000	5000
Electrical Endurance	Level	E2	E3
Internal Arc Class	kA/s	21/1	21/1
Annual Gas Leakage Rate	V/V	≤ 0.1%	
Gas Tank Protection Degree	IP	IP67	
Enclosure Protection Degree	IP	IP54/IP4X	

MEDIUM VOLTAGE CABINET/RING MAIN UNIT

SF6 Ring Main Unit

Voltage: 12/24/40.5 kV

Power: 630 A

LE-RMU-SF6 Ring Main Unit

Product Introduction

The LE-RMU-SF6 Series SF6 Gas-Insulated Ring Main Unit (hereinafter referred to as RMU) is the latest generation of 12/24 /40.5 kV SF6 gas-insulated modular switchgear, available in both extensible and compact configurations.

The product integrates advanced international design concepts, precision manufacturing processes, and state-of-the-art global production technology.

Key features include a compact structure, minimal maintenance requirements, easy operation, and excellent electrical and mechanical performance with high reliability.

The LE-RMU-SF6 is widely applied in commercial and industrial power distribution systems, high-rise buildings, outdoor switchgear installations, and prefabricated substations.

The LE-RMU-SF6 Series RMU has successfully passed type tests conducted by XIHARI and ASTA, ensuring full compliance with international standards.

Operating Environment

- **Ambient Temperature:**
  — Maximum ambient temperature: +60°C
  — Minimum ambient temperature (indoor): –40°C
- **Ambient Humidity:**
  — 24-hour average ⩽95%
  — Monthly average ⩽90%
- Altitude ⩽4500 m
- **Atmospheric Conditions:**
  Unaffected by pollution, dust, corrosive or flammable gases, smoke, or other environmental factors.

Technical Features

- All primary high-voltage live parts are completely sealed in a stainless-steel gas tank, fully welded and protected from external environmental influences, ensuring operational reliability, personnel safety, and maintenance-free performance.
- Compact structure, easy to install in space-constrained environments.
- The stainless-steel gas tank is made of 3 mm 304 stainless steel and welded using advanced 3D five-axis laser welding systems from Germany's TRUMPF company, ensuring superior weld quality, excellent gas tightness, and a refined appearance.
- The tank is tested with SEILER's fully automatic helium leak detection system from Germany, ensuring a leakage rate of <0.01% per year and a service life exceeding 30 years.
- Modular design allows flexible configuration and expansion according to different distribution requirements.
- Fully insulated and shielded extension busbars ensure high reliability and safety.
- Simple and effective interlocking system prevents maloperation.
- Reliable operating mechanism: mechanical endurance of the load break switch up to 5000 operations, and of the vacuum circuit breaker up to 10000 operations.
- Load break switch–fuse combination unit transfer current capability: 12 kV – 1750 A ; 24 kV – 1400 A.
- Factory-integrated automation solutions available to support intelligent switchgear operation.
- Fully automated assembly line ensures consistent product quality.

Technical Parameters

LE-RMU-SF6-12 kV	630A	Unit	Load switch cabinet	Fuse combination electrical cabinet	Circuit breaker cabinet
Rated voltage	kV	12	12	12
Rated frequency	Hz	50	50	50
Rated current	A	630	125*	630/1250
Rated power frequency withstand voltage (1min)	kV	42/48	42/48	42/48
Rated lightning impulse withstand voltage (peak)	kV	75/85(95/110)	75/85	75/85
Electrical Endurance	Times	E3	E3	E2
Mechanical Endurance	Times	5000	5000	10000
Rated short-circuit breaking current	kA		31.5*	20/25
Rated Short-Circuit Making Current (peak)	kA	50/63	80*	50/63
Rated transfer current	A		1750	
Main and Earthing Circuit Short -Time Withstand Current	kA	50/63		50/63
Earthing Circuit Short -Time Withstand Current (2 s)	kA	20		20
Main Circuit Short -Time Withstand Current (4 s)	kA	20(25,4s)		20/25
Internal Arc Classification	kA/s	AFLR，20kA，1s		
Rated Operating Pressure (at 20°C)	MPa	0.03	0.03	0.03
Minimum Operating Pressure (at 20°C)	MPa	0.02	0.02	0.02
Rated cable charging breaking current	A	40		
Rated Earth Fault Current	A	120		
Rated Earth Fault Cable Charging Current	A	69.3		
Enclosure Protection Degree	IP	IP41	IP41	IP41
Gas Tank Protection Degree	IP	IP67	IP67	IP67
Annual Gas Leakage Rate	%/year	≤0.01%	≤0.01%	≤0.01%
Panel Width	mm	360/375	360/420	360/420/425/500
Panel Depth	mm	780/750 (excluding door)		
Panel Height	mm	1865/1950		

* Limited by high-voltage fuse
* Includes State Grid standardized customized dimensions

Technical Parameters

LE-RMU-SF6-24 kV	630A	Unit	Load switch cabinet	Fuse combination electrical cabinet	Circuit breaker cabinet
Rated voltage	kV	24	24	24
Rated frequency	Hz	50	50	50
Rated current	A	630	125*	630
Rated power frequency withstand voltage (1min)	kV	65/79	65/79	65/79
Rated lightning impulse withstand voltage (peak)	kV	125/145	125/145	125/145
Electrical Endurance	Times	E3	E3	E2
Mechanical Endurance	Times	5000	5000	10000
Rated short-circuit breaking current	kA		31.5*	20/25
Rated Short-Circuit Making Current (peak)	kA	50/63	80*	50/63
Rated transfer current	A		1400	
Main and Earthing Circuit Short -Time Withstand Current	kA	50/63		50/63
Earthing Circuit Short -Time Withstand Current (2 s)	kA	20		20
Main Circuit Short -Time Withstand Current (4 s)	kA	20(25,3s)		20(25,3s)
Internal Arc Classification	kA/s	AFLR，20kA，1s		
Rated Operating Pressure (at 20°C)	MPa	0.03	0.03	0.03
Minimum Operating Pressure (at 20°C)	MPa	0.02	0.02	0.02
Rated cable charging breaking current	A	31.5		
Rated Earth Fault Current	A	75		
Rated Earth Fault Cable Charging Current	A	54.6		
Enclosure Protection Degree	IP	IP4X	IP4X	IP4X
Gas Tank Protection Degree	IP	IP67	IP67	IP67
Annual Gas Leakage Rate	%/year	≤0.01%	≤0.01%	≤0.01%
Panel Width	mm	360	360	425/500

* Limited by high-voltage fuse

Technical Parameters

LE-RMU-SF6-40.5 kV 630A|Outdoor	Unit	Load-break switch unit (C)	VCB unit (V)
Rated voltage	kV	40.5*	40.5*
Rated frequency	Hz	50/60	50/60
Rated current	A	630	630
Rated power frequency withstand voltage (1min)	kV	95/118	95/118
Rated lightning impulse withstand voltage (peak)	kV	185/215	185/215
Electrical Endurance	Times	E2	E2
Mechanical Endurance	Times	5000	10000
Rated short-circuit breaking current	kA	-	20/25/31.5
Rated Short-Circuit Making Current (peak)	kA	52/65*	52/65*/80
Rated transfer current	A	-	-
Rated short-time withstand current of primary circuit	kA	20/4s, 25/3s	20/4s, 25/4s, 31.5/4s
Rated short-time withstand current of earthing switch circuit	kA	20/25	20/25/31.5
Rated peak withstand current of primary and earthing circuit	kA	52/65*	52/65*80
IAC class	kA/s	AFLR，25kA，1s	-
Rated operating pressure (at 20℃, gauge)	MPa	0.04	0.04
Minimum operating pressure (at 20℃, gauge)	MPa	0.03	0.03
Rated cable charging current	A	21	-
Earthing fault current	A	63	-
Earthing fault cable charging current	A	36	-
Enclosure protection degree	-	IP54	IP54
Gas tank protection degree	-	IP67	IP67
Enclosure explosion-proof grade	-	IK10	IK10
Gas leakage rate per year	%/year	≤0.01%	≤0.01%
Switchgear width	mm	450	500

*At 60Hz, it corresponds to 52/65kA, and at 50Hz,it corresponds to 50/63kA.

Technical Parameters

LE-RMU-SF6-40.5 kV 630A|Indor	Unit	Load-Break switch (C)	Switch-fuse combination unit (F)	VCB unit (V)
Rated voltage	kV	40.5/60	40.5/60	40.5/60
Rated frequency	Hz	50/60	50/60	50/60
Rated current	A	630	63**	630
Rated power frequency withstand voltage	kV	95/118	95/118	95/118
Rated lightning impulse withstand voltage (peak)	kV	185/215	185/215	185/215
Electrical Endurance	Times	E2	E2	E2
Mechanical endurance	Times	5000	5000	10000
Rated short-circuit breaking current	kA	31.5	-	20/25/31.5
Rated peak withstand current (peak)	kA	53/65*	80	53/65*/80
Rated transformer inrush current	A	-	840	-
Main circuit short-time withstand current	kA	20/4s, 25/3s	-	20/4s, 25/4s, 31.5/4s
Rated peak withstand current of primary circuit and earthing circuit	kA	20/25	-	20/25/31.5
Short-time withstand current of primary circuit and earthing circuit	kA	53/65* -	- AFLR, 25kA, 1s	53/65*/80
Internal arc class	kA/s	0.04	0.04	-
Rated working pressure (20℃ gauge)	MPa	0.03	0.03	0.04
Minimum working pressure (20℃ gauge)	MPa	21	-	0.03
Rated cable charging current	A	63	-	-
Earthling fault current	A	36	-	-
Earthling fault cable charging current	A	IP41	IP41	-
Enclosure protection degree	-	IP67	IP67	IP41
Air-breathing enclosure protection degree	-	≤0.01%	≤0.01%	IP67
Gas leakage rate per year	%/year	450	450	<0.01%
Switchgear width	mm			500

*At 60Hz, it corresponds to 52/65kA, and at 50Hz jt correspoonds to 50/63kA.
*Limited by the high-voltage fuse

LOW VOLTAGE SWITCHGEAR/SWITCH CABINET

Intelligent Digital Switchgear

Voltage: 400/690 V AC

LE Series Intelligent Digital Switchgear

Overview

The LE-SWG-M, cabinet adopts a modular structure, with each functional compartment combined as required.
The cabinet height is based on a 25 mm modular unit (IE-25 mm). The standard cabinet height is 2200 mm, with an effective component installation height of 72E, equivalent to 1800 mm.
Each LE-SWG-M switchgear cabinet consists of several functional compartments, including a busbar compartment, functional unit compartment (switch compartment), cable termination compartment, and auxiliary equipment compartment.
An independent control bus channel is provided at the upper front section of the cabinet, effectively preventing signal interference and ensuring electromagnetic shielding.
The cabinet’s overall dimensions depend on the configuration and combination of these functional compartments.
According to customer requirements, the LE-SWG-M cabinet can be classified into partition forms 2b / 3b / 4a / 4b, providing effective protection for personnel and equipment.
For convenient inspection and maintenance, removable partitions are used between compartments, with some partitions made of transparent PC panels for easy visual observation.
① Busbar Compartment
② Functional Unit Compartment
③ Cable Termination Compartment
④ Auxiliary Compartment

Internal Equipment

- In the LE-SWG-M switchgear, all switching devices are mounted on a robust installation plate.
- The combination of the installation plate and the installed devices forms a functional unit, performing a clearly defined electrical function.
- According to IEC 60439-1, a functional unit is the part of a low-voltage switchgear assembly comprising all electrical and mechanical components that jointly perform a specific function.
- The height of a functional unit is determined by the number of 25 mm modular units (IE-25).
- Each cabinet includes 72 modules, each with a height of 25 mm.
- A systematically applied engineering method ensures that the selection and arrangement of electrical components are consistent and error-free, providing high reliability, safety, and design repeatability.
- This modular concept reflects the precision and engineering excellence associated with German technology.

Busbar

The busbar system is used to distribute and transmit electrical energy throughout the entire switchgear assembly.
Each LE-SWG-M switchgear cabinet includes two types of busbars:
- Main busbars
- Distribution busbars

The rated current of the main busbars determines the depth of the switchgear cabinet.
The busbars are securely mounted on the cabinet frame using insulated support brackets, which have been tested for temperature resistance and flame-retardant performance.
This well-engineered busbar design ensures optimal current distribution, mechanical strength, and operational safety, reflecting the precision and reliability of modern modular switchgear systems.

Technical Parameters

LE-SWG-M-400V AC/690V AC

COMPLIANCE TO STANDARDS-GENERAL CHARACTERISTICS	
Electrical Characteristics	
Rated insulation voltage	690V/1000V
Rated operational voltage	400V AC/690V AC
Rated impulse withstand voltage	8kV
Overvoltage category	III
Degree of pollution	3
Frequency	50/60Hz
Main Busbars Rated Current	
Main busbars	Vertical busbars
Rated current	7500A
Rated peak withstand current	105-330kA
Rated short-time current	55-150kA
Surface Protection	
External surface protection	Epoxy powder polymerised at high temperature
Standard colors	RAL7032/RAL7035

Applications for Distribution, Power Factor Correction and Motor Control					
Functionality	Distribution cubicle	Power factor correction cubicle	Fixed-type Motor Control Center(MCC)cubi	Withdrawable -type cubicle	Variable speed drives cubicle
Distribution Busbars					
Rated current	up to 3200A	-	up to 3200A	up to 1600A	up to 3200A
Rated peak withstand current	130-150kA	-	130-150kA	130-150kA	130-150kA
Rated short-time current	60kA	-	60kA	60kA	60kA
Outgoing					
Motor feeders	-	-	-	up to 250kW	up to 250kW
Distribution feeders	up to 7500A	-	up to 7500A	630A	-
Mechanical Characteristics					
Total height	2200mm/2300mm				
Usable height	1800mm				
Width	600/800/1000mm				
Depth	600/800/1000mm				
Functional unit type	FFF	FFF	FFF	WWW	FFF
Forms according	1/2b/3b/4	1/2b/3b/4	1/2b/3b/4	3b/4	1/2b/3b/4
Degree of protection according	IP30、IP31、IP40、IP41、IP42、IP44、IP54			IP30, IP31, IP40 IP41, IP42, IP44 IP54	IP30, IP31 IP42, IP54

LINDEMANN-REGNER www.lindemann-regner.de

SST SOLID-STATE TRANSFORMER R&D

Next-generation semiconductor-based power conversion

To reinforce our European premium quality DNA, the company has established an R&D center for European electrical and SST standards in China. The core technical team is led by senior engineers from China, Germany, and the Czech Republic, integrating the latest technological developments from both Europe and China. Our manufacturing base is certified to DIN EN ISO 9001, ensuring the synergy of German design and efficient Chinese production.

Ultra-High Efficiency

⩾98.5% efficiency reduces energy losses and operational costs

Compact Size

60% smaller footprint compared to traditional transformers

Bidirectional Power

Seamless power flow control for grid stabilization and storage integration

Fast Protection

Millisecond-level protection with <10 ms fault isolation

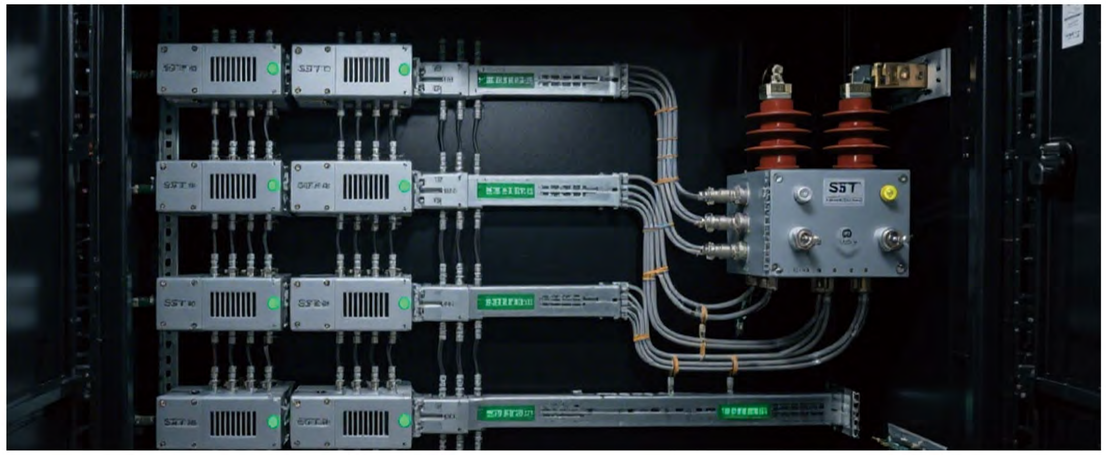

Currently, the company is conducting in-depth collaboration with globally renowned universities such as TU Dresden (Germany) and Shanghai Jiao Tong University (China), jointly developing SST solid-state transformers and key components. Medium-voltage MW-class products are expected to be launched in 2027, undergoing the most rigorous TÜV performance testing in Germany. With European top-tier quality as its foundation, the technology aims to drive the global power equipment upgrade and contribute to the energy transition through the strength of German engineering and Chinese industrial excellence.

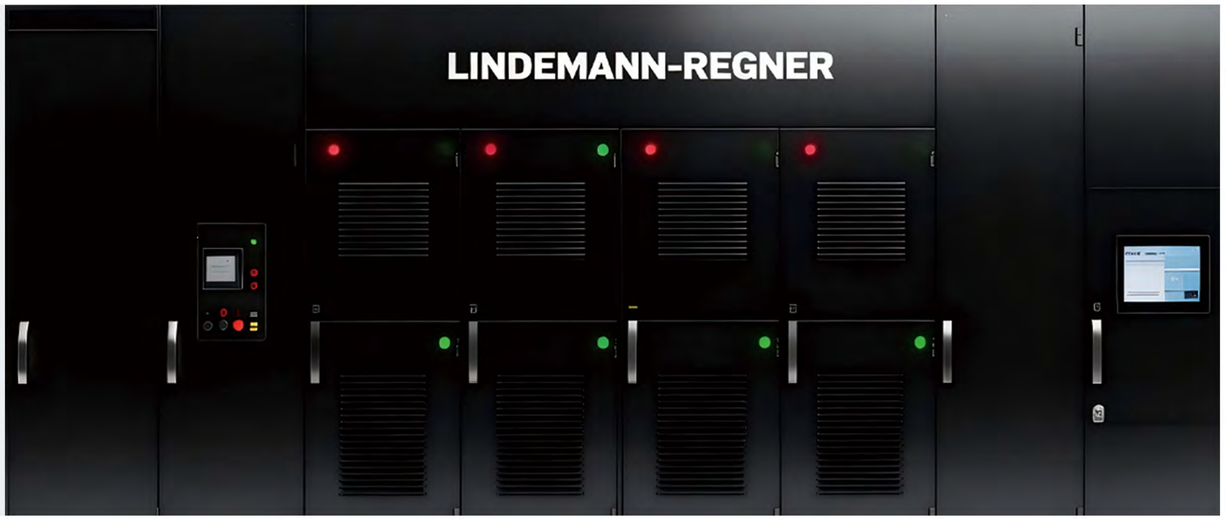

EPC

FULL LIFECYCLE PROJECT MANAGEMENT

The company operates as a German EPC provider (Engineering, Procurement, Construction) within the European and Middle Eastern energy sectors. Its activities focus on comprehensive lifecycle management of complex energy projects, covering all stages from conceptual design to long-term operation. The service portfolio spans the entire value chain of energy infrastructure projects, including offshore wind grid connections, energy storage systems, and large-scale distribution facilities. All projects are executed in accordance with German engineering and safety standards, ensuring efficiency, operational reliability, and sustainability through an integrated management approach.

Technical Consulting and Project Evaluation

Energy audits, feasibility studies, and market assessments form the basis for customized solutions in compliance with DIN,EN,and IEC standards.

Lifecycle-Oriented Planning and Design Optimization

Design and planning are based on total lifecycle cost analysis, combining accurate budgeting with performance-oriented engineering.

Procurement and System Integration

Strict supply chain control and the use of European resources guarantee adherence to the highest quality and energy efficiency requirements.

Digital and Modular Construction

Modular design principles and digital monitoring systems shorten construction time and reduce on-site risks.

Quality Assurance and Maintenance

After the project is put into operation, intelligent monitoring, preventive maintenance and rapid response services will be provided.

Project Refinancing & Operational Performance Support

For operational projects, the company provides financial and technical support, enabling clients to improve profitability, cash flow, and long-term asset performance.

SERVICE

From conceptual planning to long-term operation, Lindemann-Regner provides comprehensive lifecycle support based on certified engineering, digital supervision, and on-site service expertise. The company's competence covers EPC implementation, transformer and switchgear manufacturing, as well as smart grid and system integration for utility and industrial power networks.

EPC Project & Installation

Turnkey implementation and safe commissioning of medium- and high-voltage transformers, SST systems, and switchgear in full compliance with IEC and EN standards. All projects follow structured execution procedures ensuring electrical, mechanical, and operational reliability throughout commissioning and service life.

Comprehensive Technical Maintenance

Preventive and corrective maintenance programs defined under Service Level Agreements (SLAs) secure maximum equipment uptime, operational safety, and extended lifecycle performance. Condition monitoring and predictive diagnostics enable proactive maintenance strategies and optimized cost efficiency.

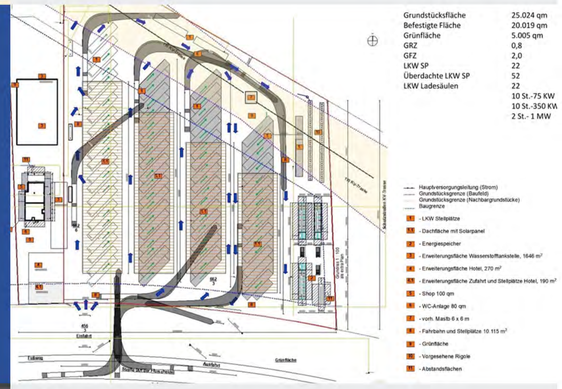

HV/MV Transformer & System Design

Engineering design and simulation for distribution networks, grid interconnections, and microgrids, including load-flow studies, short-circuit analysis, and ROI modeling. System architectures are developed in accordance with European grid codes and regional operating conditions.

GLOBAL DELIVERY & SERVICE NETWORK

Leveraging a coordinated network of German R&D, Chinese intelligent manufacturing, and global logistics, Lindemann-Regner has established a rapid delivery and service network ensuring 72-hour service response and 30–90 day core equipment delivery.

After-Sales Service

A service network headquartered in Munich and covering France, the Czech Republic, Hungary, Poland, and Dubai, with more than 20 authorized service partners across Europe, enables 72-hour response times and 24/7 remote technical assistance.

Production Assurance

Regional production and logistics centers in Lübeck, Shanghai, and Dubai maintain strategic inventories of transformers, RMUs, and switchgear systems, guaranteeing continuous supply capability for major grid and EPC projects.

Warehousing Network

Dedicated long-term storage facilities at Lübeck, Shanghai, and Dubai ensure the immediate availability of key components for core regional markets.

Logistics Coordination

Through cooperation with DHL and international logistics providers, a multimodal transport concept—comprising sea, air, and land routes-enables 48-hour dispatch within Europe and 30- to 90-day global delivery. For critical infrastructure projects, the "Global Priority Dispatc" program ensures time-bound delivery and coordinated commissioning support.

LINDEMANN-REGNER PROJECTS

01 180 kW Ultra-Fast Charging + Customized BESS + LINDEMANN High-Efficiency Power Conversion

Advanced German grid-boosting technology ensuring efficient and stable charging performance.

02 LINDEMANN Integrated Off-Grid / Microgrid Solution

Hybrid power supply with solar PV, diesel generation, BESS, and EMS.

03 LINDEMANN Grid-Connected / Microgrid System

1000 W peak load management + 180 kW ultra-fast charging. Self-developed MP-ESS-200 modular cabinet integrated with 137 kWp PV array.

04 100 kW Stable Microgrid for Irrigation Supply

Reliable operation under extreme temperatures up to 55 °C, integrating PV, diesel generation, BESS, EMS, and active liquid cooling.

05 5 MVA High-Capacity Microgrid with Charging Infrastructure

Grid-connected hybrid solution combining PV generation and dynamic AC/DC load management.